THIS DRAWING AND SPECIFICATIONS,HEREIN,ARE THE PROPERTY OF INVENTEC CORPORATION AND SHALL NOT BE REPODUCED,COPIED,OR USED IN WHOLE OR IN PART AS THE BASIS FOR THE MANUFACTURE OR SALE OF ITEMS WITHOUT WRITTEN PERMISSION,INVENTEC CORPORATION, 2013 ALL RIGHT RESERVED.

NOTES:
1.HSF Property:Comply iSupplier system HSF property attribute up-to-date value.

SNICKERS 12.5"

MV BUILD

FINAL

2014.11.04

DATE	CHANGE NO.	REV
4-NOV-2014	2013-ECO-012858	A

DESIGN / DRAWER	PUMA CHEN	DATE	4-NOV-2014
CHECK	PUMA CHEN		
APPROVAL	PC CHIU		
FILE NAME	SNICKERS\SNICKERS	6050A2635701-MB-A01	
PCB P/N	6050A2635701	PCB VER	A02

INVENTEC

TITLE: MODEL,PROJECT,FUNCTION
SNICKERS MAIN BOARD

SIZE	CODE	DOC.NUMBER	REV
A3	CS	1310A26357-0-0	X01

SHEET of 64

WWW.ALIFIXIT.COM

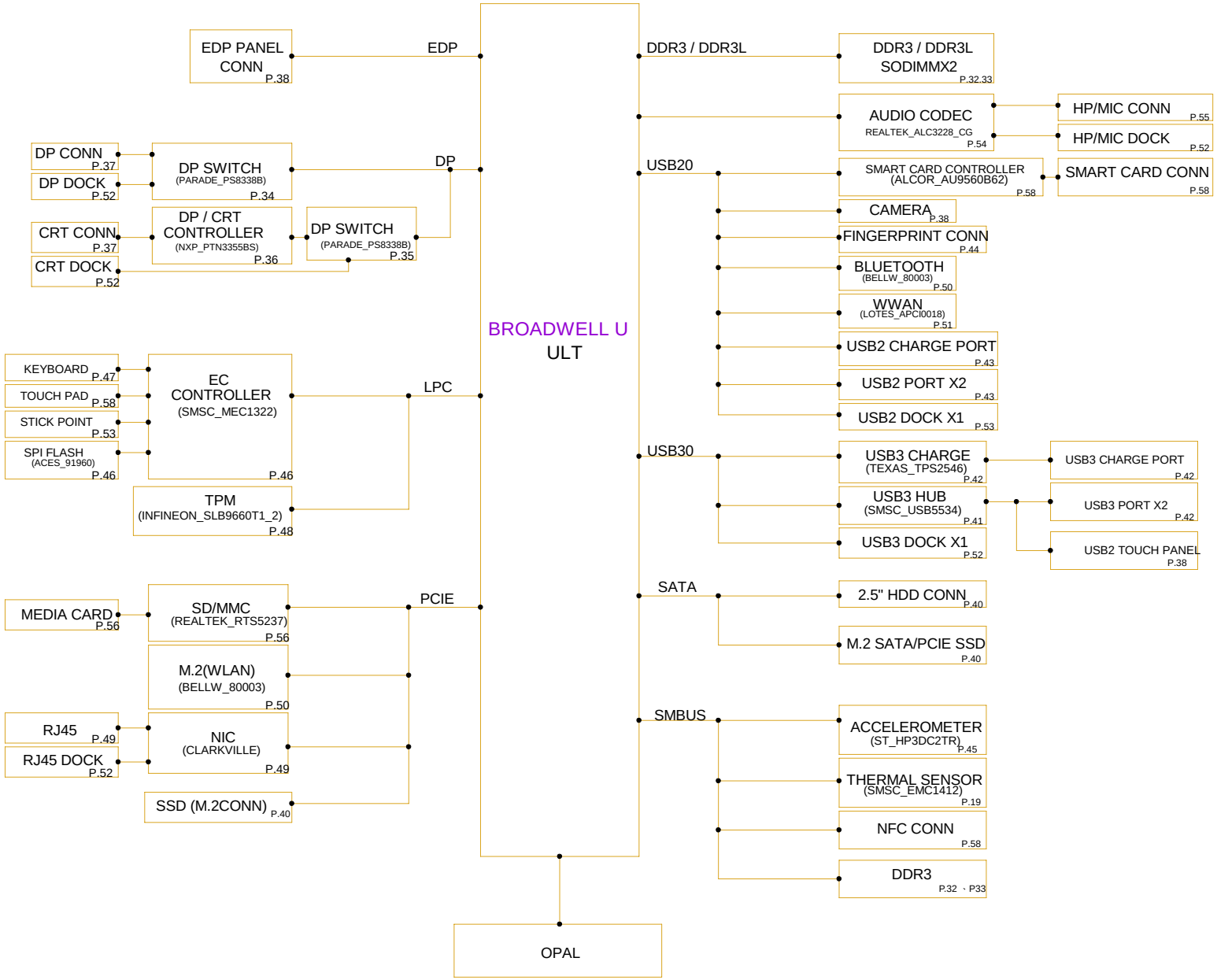

WWW.ALISALER.COM

CHANGE BY	PUMA CHEN	DATE	4-NOV-2014
PCB P/N	6050A263701	PCB VER	A02

TITLE: MODEL,PROJECT,FUNCTION
Block Diagram

SIZE	CODE	DOC.NUMBER	REV
C	CS	1310A26357-0-0	X01

SHEET 1 of 64

TABLE OF CONTENTS

1. PROJECT NAME
2. BLOCK DIAGRAM
3. TABLE OF CONTENTS
4. POWER BLOCK DIAGRAM
5. SYSTEM POWER(CHARGER)
6. SYSTEM POWER(OCP)
7. SYSTEM POWER(P3V3DS&P5V0DS)
8. PMC
9. SYSTEM POWER(P1V35&P0V675S)
10. SYSTEM POWER(P1V05A)
11. SYSTEM POWER(P1V5S)
12. USB HUB POWER (P1V2A)
13. SYSTEM POWER(PVCORE&PVAXG-1)
14. SYSTEM POWER(PVCORE&PVAXG-2)
15. POWER SEQUENCE (SLEEP)
16. DC JACK & BATTERT CONN.
17.SYSTEM POWER(P5V0A_P3V3A)
18. POWER (SEQUENCE)
19.FAN & THERMAL
20. XDP & ME CONN.
21. BROADWELL_1 (MISC,JTAG)
22. BROADWELL_2 (LPC,SPI,SMBUS,CLINK,PM)
23. BROADWELL_3 (GPIO)
24. BROADWELL_4 (DP,EDP)
25. BROADWELL_5 (DDR)
26. BROADWELL_6 (PCIE,USB)
27. BROADWELL_7 (RTC,AUDIO,SATA,JTAG)
28. BROADWELL_8 (CLK)
29. BROADWELL_9 (POWER)
30. BROADWELL_10 (POWER)
31. BROADWELL_11 (GND)
32. SYSTEM MEMORY (DIMM0)
33. SYSTEM MEMORY (DIMM1)
34. 4-LANE DP1.2 DEMUX
35. 2-LANE DP1.2 DEMUX
36. DP TO VGA CONVERTER
37. CRT & DP CONN
38. LCM (EDP) & WEBCAM CONN
39. RESERVED
40. SATA (HDD, SSD)
41. USB HUB
42. USB3 PORTS, USB CHARGE PORT
43. RESERVED
44. FINGERPRINT READER
45. ACCELEMETER
46. KBC, SPI
47. KEYBOARD
48. TPM
49. LAN
50. WLAN/BT SLOT
51. WWAN SLOT, SIM SLOT
52. DOCK
53. SMART CARD CONN(M/B), STICK POINT CONN
54. AUDIO CODEC
55. AUDIO JACK, MIC AMP.
56. CARD READER
57.POWER, WIRELESS ,MUTE(BUTTON&LED)
58. SMART CARD &NFC DAUGHTER BOARD
59. RESERVED
60. SCREW
61. EMI
62. RF SOLUTION
63. SYSTEM BOARD ID TABLE
64. MIC BOARD

CHANGE by	PUMA_CHEN	DATE	4-NOV-2014
PCB P/N	6050A2635701	PCB VER	A02

INVENTEC

TITLE MODEL,PROJECT,FUNCTION Block Diagram

SIZE	CODE	DOC.NUMBER	REV
A3	CS	1310A26357-0-0	X01

SHEET 3 of 64

WWW.ALIFIXIT.COM

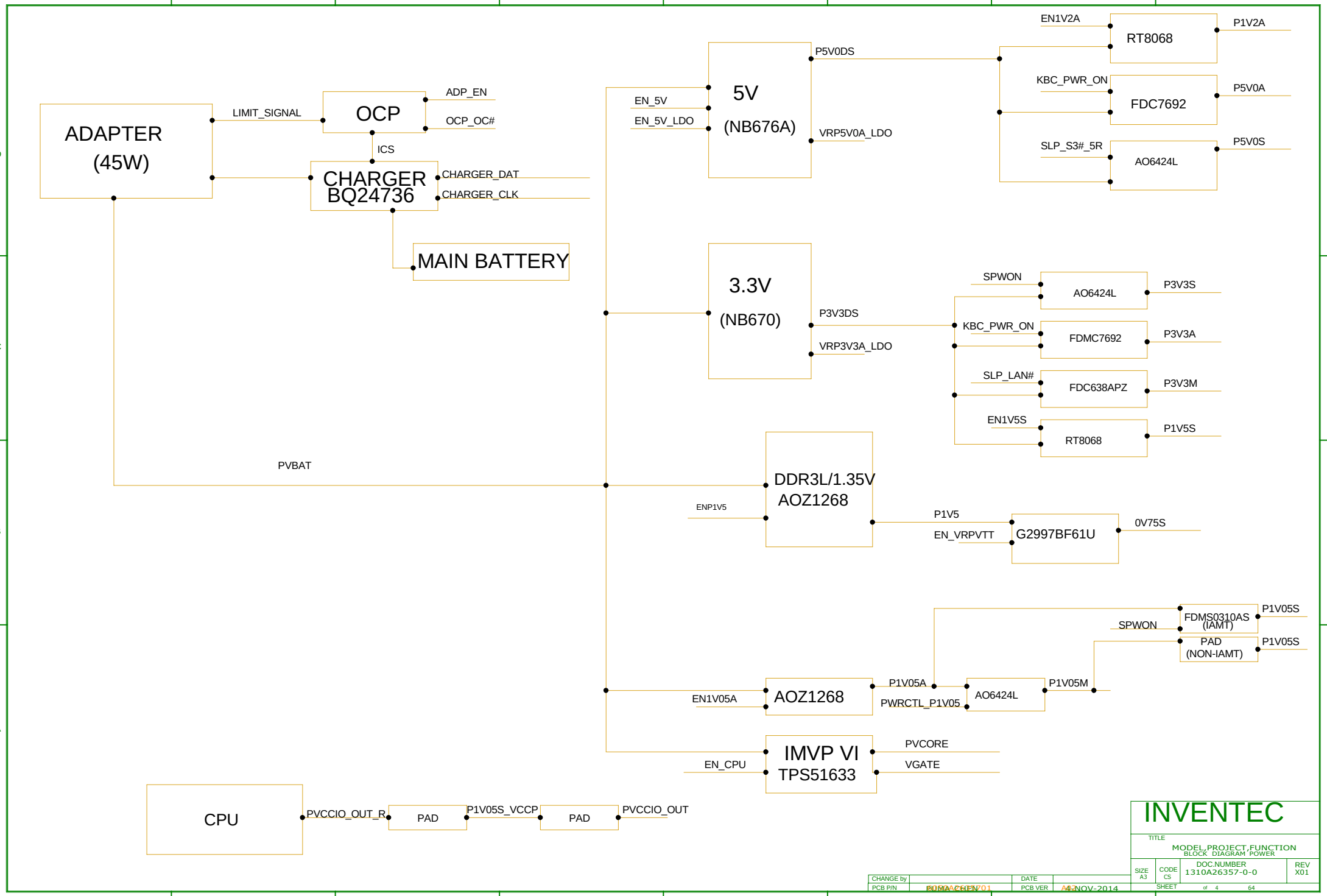

WWW.ALISALER.COM

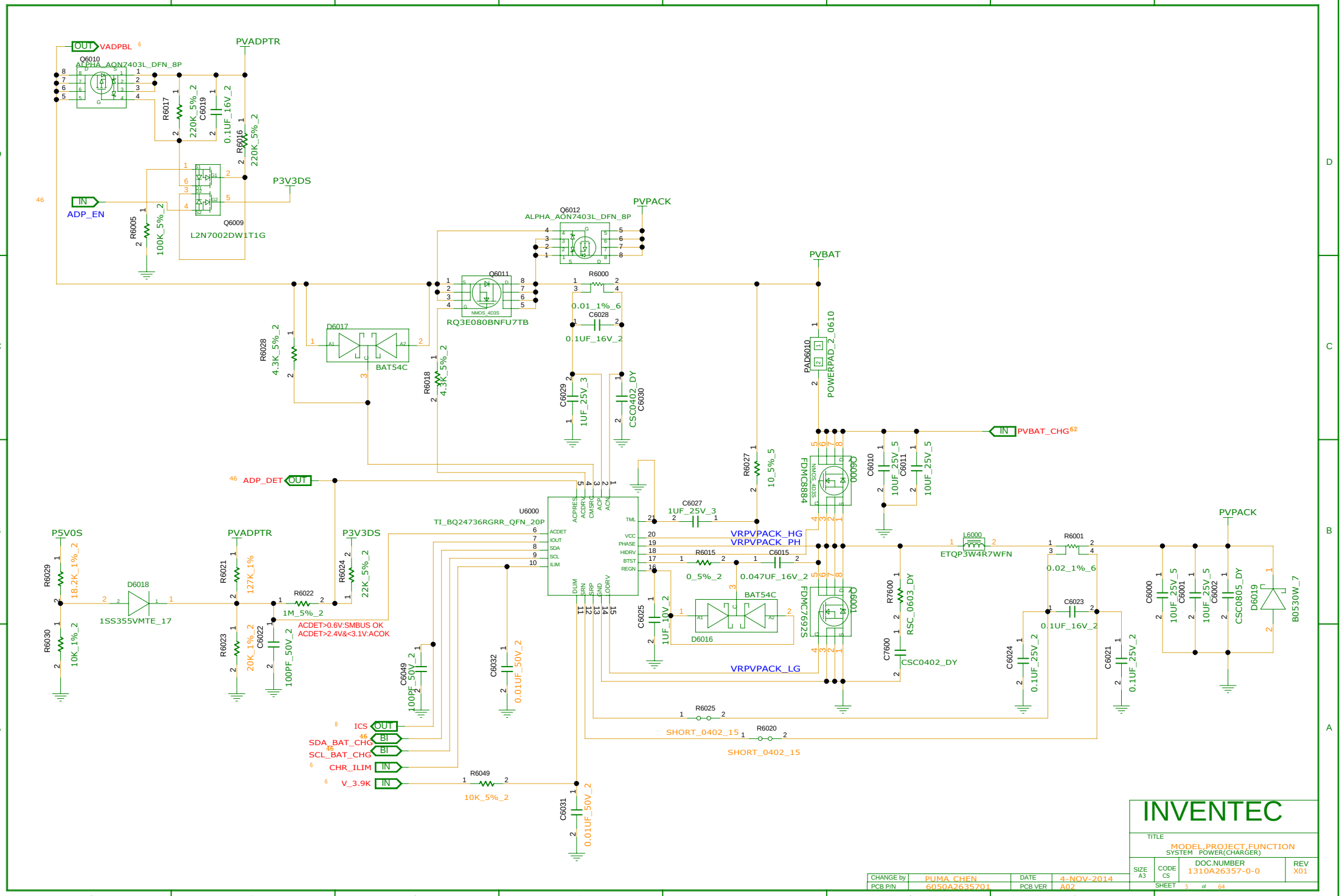
VADPBL
PVADPTR
Q6010
ALPHA_AON7403L_DFN_8P
R6017
220K_5%_2
C6019
0.1UF_16V_2
R6016
220K_5%_2
P3V3DS
ADP_EN
R6005
100K_5%_2
Q6009
L2N7002DW1T1G
PVPACK
Q6012
ALPHA_AON7403L_DFN_8P
Q6011
RQ3E080BNFU7TB
R6000
0.01_1%_6
C6028
0.1UF_16V_2
PVBAT
R6028
4.3K_5%_2
D6017
BAT54C
R6018
4.3K_5%_2
C6029
1UF_25V_3
C6030
CSC0402_DY
PAD6010
POWERPAD_2_0610
PVBAT_CHG
ADP_DET
U6000
TI_BQ24736RGRR_QFN_20P
C6027
1UF_25V_3
R6027
10_5%_5
Q6000
FDMC8884
C6010
10UF_25V_5
C6011
10UF_25V_5
VRPVPACK_HG
VRPVPACK_PH
R6015
0_5%_2
C6015
0.047UF_16V_2
BAT54C
D6016
C6025
1UF_10V_2
Q6001
FDMC7692S
VRPVPACK_LG
L6000
ETQP3W4R7WFN
R6001
0.02_1%_6
C6023
0.1UF_16V_2
R7600
RSC_0603_DY
C7600
CSC0402_DY
C6024
0.1UF_25V_2
C6021
0.1UF_25V_2
C6000
10UF_25V_5
C6001
10UF_25V_5
C6002
CSC0805_DY
D6019
B0530W_7
P5V0S
R6029
18.2K_1%_2
D6018
1SS355VMTE_17
R6030
10K_1%_2
R6021
127K_1%
R6023
20K_1%_2
C6022
100PF_50V_2
R6022
1M_5%_2
R6024
22K_5%_2
ACDET>0.6V:SMBUS OK
ACDET>2.4V&<3.1V:ACOK
C6049
100PF_50V_2
C6032
0.01UF_50V_2
ICS
SDA_BAT_CHG
SCL_BAT_CHG
CHR_ILIM
V_3.9K
R6049
10K_5%_2
C6031
0.01UF_50V_2
R6025
SHORT_0402_15
R6020
SHORT_0402_15
INVENTEC
TITLE
MODEL,PROJECT,FUNCTION
SYSTEM POWER(CHARGER)
SIZE A3
CODE CS
DOC.NUMBER 1310A26357-0-0
REV X01
SHEET 5 of 64
CHANGE by PUMA_CHEN
DATE 4-NOV-2014
PCB P/N 6050A2635701
PCB VER A02

WWW.ALIFIXIT.COM

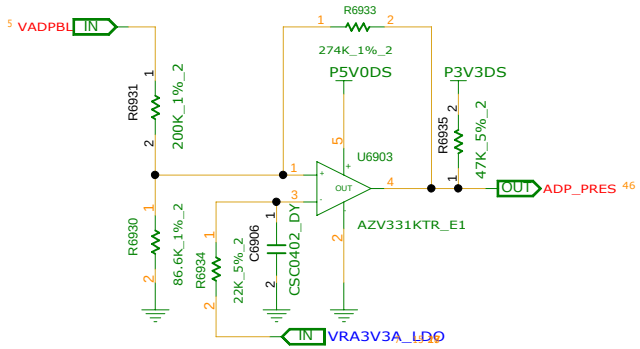

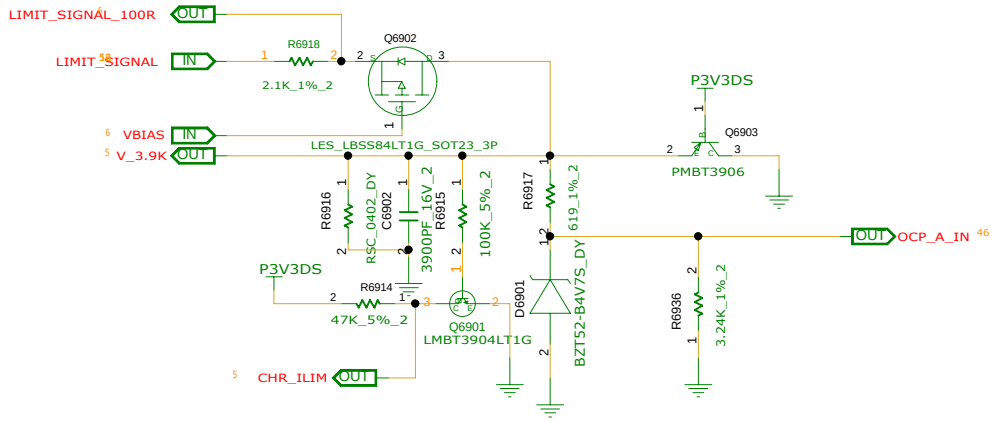

www.teknisi-indonesia.com

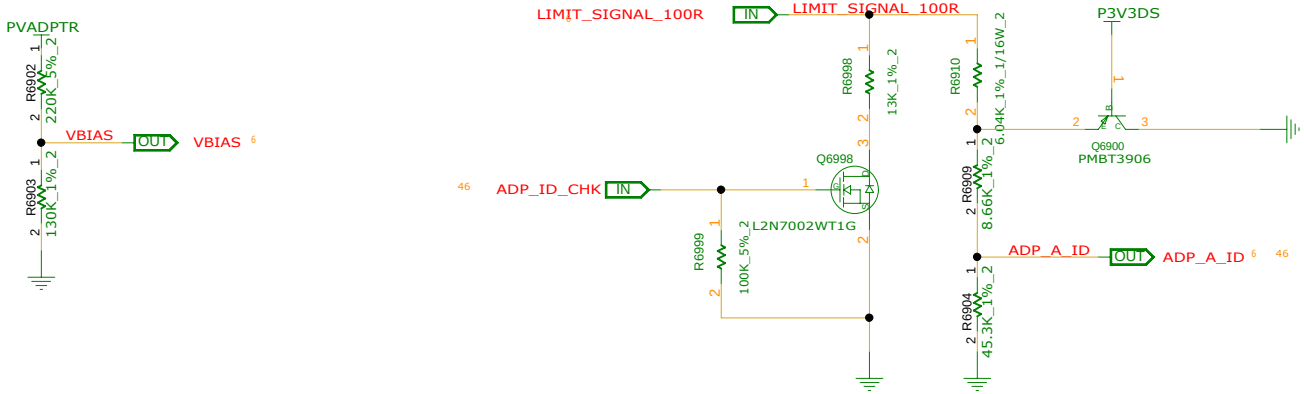

CHANGE by	PUMA_CHEN	DATE	4-NOV-2014
PCB P/N	6050A2635701	PCB VER	A02

INVENTEC

TITLE: MODEL,PROJECT,FUNCTION
SYSTEM POWER(OCP)

SIZE	CODE	DOC.NUMBER	REV
A3	CS	1310A26357-0-0	X01

SHEET 5 of 64

WWW.ALISALER.COM

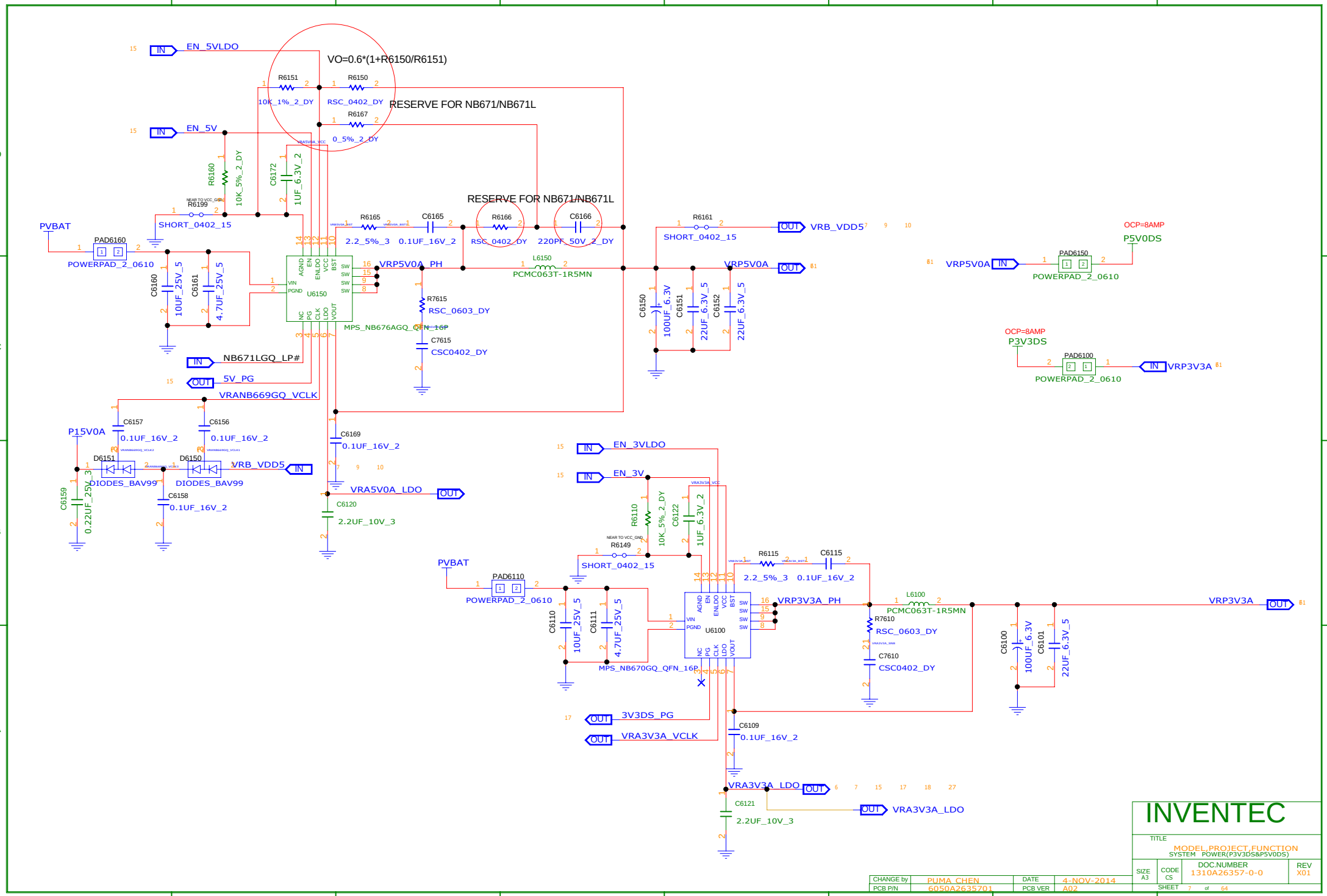
EN_5VLDO
VO=0.6*(1+R6150/R6151)
R6151
10K_1%_2_DY
R6150
RSC_0402_DY
RESERVE FOR NB671/NB671L
R6167
0_5%_2_DY
EN_5V
R6160
10K_5%_2_DY
C6172
1UF_6.3V_2
R6199
SHORT_0402_15
PVBAT
PAD6160
POWERPAD_2_0610
C6160
10UF_25V_5
C6161
4.7UF_25V_5
R6165
2.2_5%_3
C6165
0.1UF_16V_2
R6166
RSC_0402_DY
C6166
220PF_50V_2_DY
RESERVE FOR NB671/NB671L
R6161
SHORT_0402_15
VRB_VDD5
VRP5V0A_PH
L6150
PCMC063T-1R5MN
VRP5V0A
U6150
MPS_NB676AGQ_QFN_16P
R7615
RSC_0603_DY
C7615
CSC0402_DY
C6150
100UF_6.3V
C6151
22UF_6.3V_5
C6152
22UF_6.3V_5
OCP=8AMP
P5V0DS
VRP5V0A
PAD6150
POWERPAD_2_0610
OCP=8AMP
P3V3DS
PAD6100
POWERPAD_2_0610
VRP3V3A
NB671LGQ_LP#
5V_PG
VRANB669GQ_VCLK
C6157
0.1UF_16V_2
C6156
0.1UF_16V_2
P15V0A
D6151
DIODES_BAV99
D6150
DIODES_BAV99
VRB_VDD5
C6159
0.22UF_25V_3
C6158
0.1UF_16V_2
C6169
0.1UF_16V_2
VRA5V0A_LDO
C6120
2.2UF_10V_3
EN_3VLDO
EN_3V
R6110
10K_5%_2_DY
C6122
1UF_6.3V_2
R6149
SHORT_0402_15
PVBAT
PAD6110
POWERPAD_2_0610
C6110
10UF_25V_5
C6111
4.7UF_25V_5
U6100
MPS_NB670GQ_QFN_16P
R6115
2.2_5%_3
C6115
0.1UF_16V_2
VRP3V3A_PH
L6100
PCMC063T-1R5MN
R7610
RSC_0603_DY
C7610
CSC0402_DY
C6100
100UF_6.3V
C6101
22UF_6.3V_5
VRP3V3A
3V3DS_PG
VRA3V3A_VCLK
C6109
0.1UF_16V_2
VRA3V3A_LDO
C6121
2.2UF_10V_3
VRA3V3A_LDO
INVENTEC
TITLE
MODEL,PROJECT,FUNCTION
SYSTEM POWER(P3V3DS&P5V0DS)
SIZE A3
CODE CS
DOC.NUMBER 1310A26357-0-0
REV X01
SHEET 7 of 64
CHANGE by PUMA_CHEN
DATE 4-NOV-2014
PCB P/N 6050A2635701
PCB VER A02

WWW.ALIFIXIT.COM

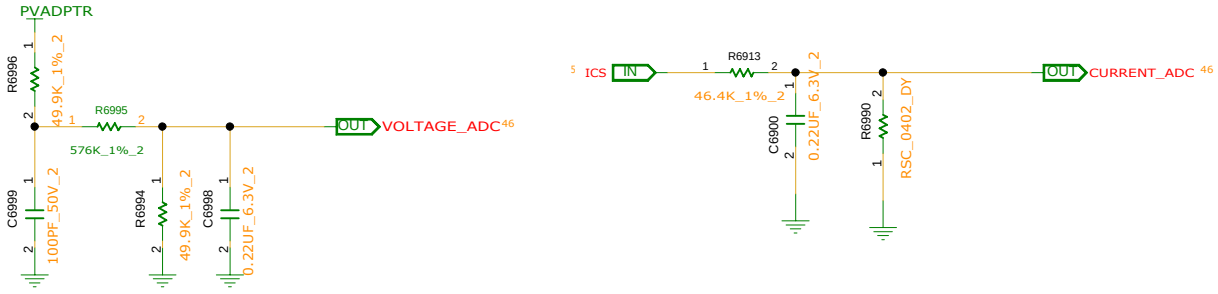

INVENTEC

TITLE
MODEL,PROJECT,FUNCTION
SYSTEM POWER(PMC)

SIZE	CODE	DOC.NUMBER	REV
A3	CS	1310A26357-0-0	X01

SHEET 8 of 64

CHANGE by	PUMA_CHEN	DATE	4-NOV-2014
PCB P/N	6050A2635701	PCB VER	A02

WWW.ALISALER.COM

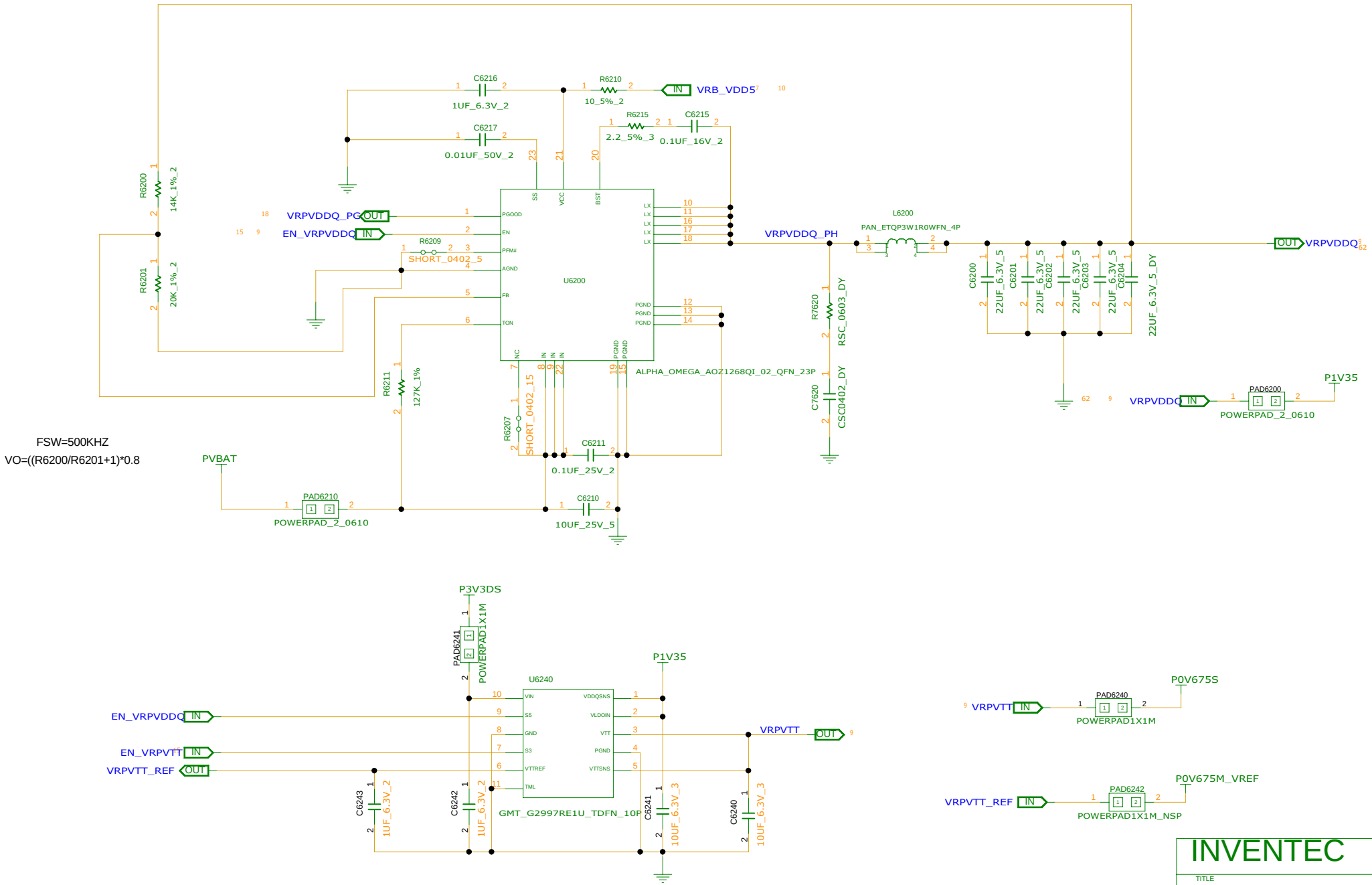

INVENTEC

TITLE
MODEL.PROJECT.FUNCTION
SYSTEM POWER(P1V35&P0V675S)

CHANGE by	PUMA_CHEN	DATE	4-NOV-2014	SIZE A3	CODE CS
PCB P/N	6050A2635701	PCB VER	A02	DOC.NUMBER 1310A26357-0-0	REV X01

SHEET 9 of 64

WWW.ALIFIXIT.COM

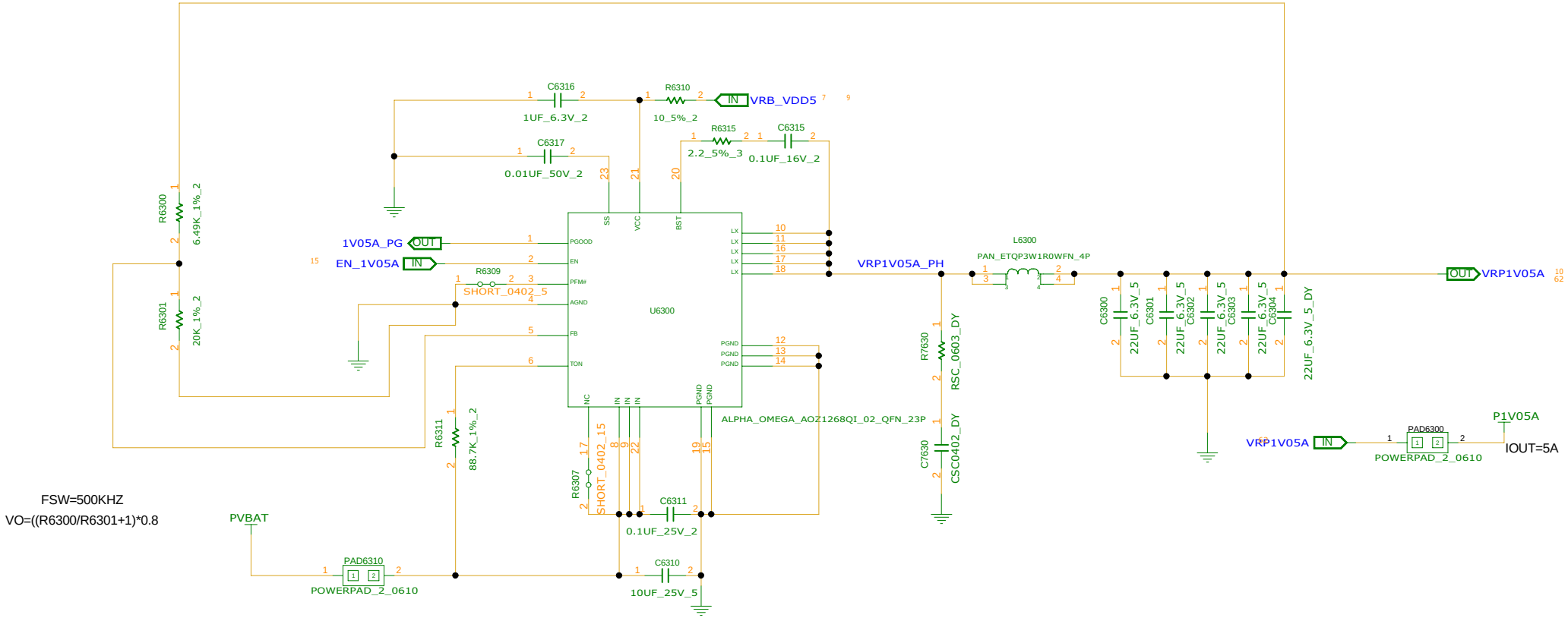

CHANGE by		DATE	
PCB P/N	6050A2635701	PCB VER	A02

INVENTEC

TITLE
MODEL,PROJECT,FUNCTION
SYSTEM POWER(P1V05A)

SIZE	CODE	DOC.NUMBER	REV
A3	CS	1310A26357-0-0	X01

SHEET of 10 64

WWW.ALISALER.COM

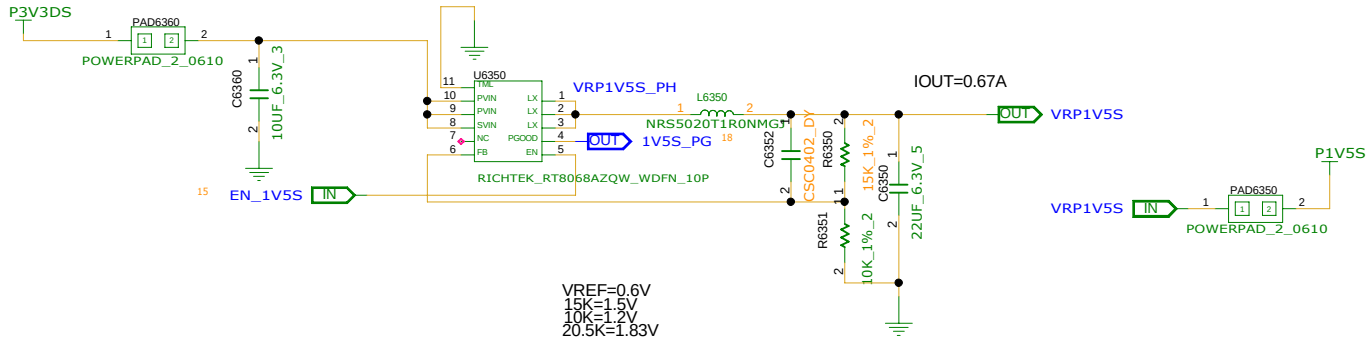

INVENTEC

TITLE
MODEL,PROJECT,FUNCTION
SYSTEM POWER(P1V5S)

SIZE	CODE	DOC.NUMBER	REV
A3	CS	1310A26357-0-0	X01

SHEET 11 of 64

CHANGE by	PUMA_CHEN	DATE	4-NOV-2014
PCB P/N	6050A2635701	PCB VER	A02

WWW.ALIFIXIT.COM

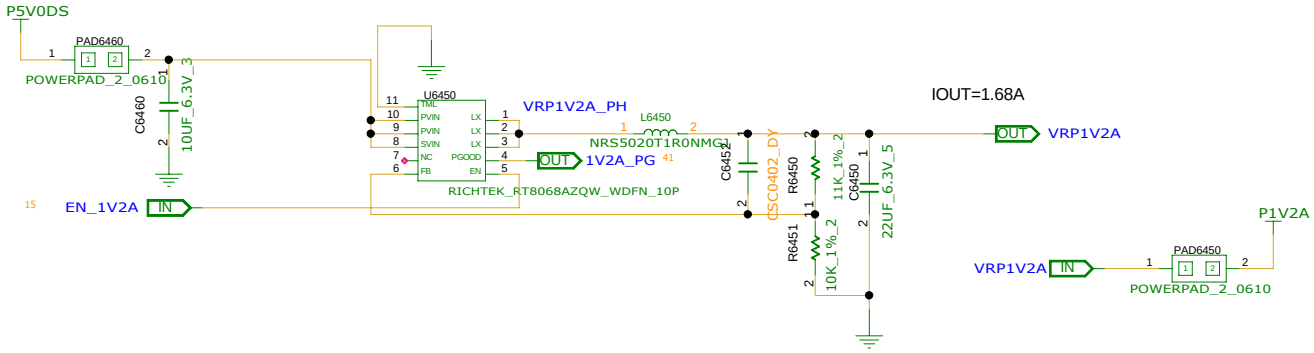

VREF=0.6V
15K=1.5V
10K=1.2V
11K=1.25V
20.5K=1.83V

MODE= FLOAT=SKIP MODE
MODE=VIN=FCCM MODE

CHANGE by	PUMA_CHEN	DATE	4-NOV-2014
PCB P/N	6050A2635701	PCB VER	A02

INVENTEC

TITLE
MODEL,PROJECT,FUNCTION
SYSTEM POWER(P1V2A)

SIZE	CODE	DOC.NUMBER	REV
A3	CS	1310A26357-0-0	X01

SHEET 12 of 64

WWW.ALISALER.COM

	47W	28W	15W
INPUT VOLTAGE RANGE	9V TO 20V	6V TO 20V	6V TO 20V
MAX CURRENT	85A	40A	32A
THERMAL DESIGN CURRENT	33A	19A	14A
DYNAMIC CURRENT	60A	32A	27A
OVER CURRENT LEVEL	105A	47A	37A
SWITCHING FREQUENCY	800KHZ	800KHZ	1MHZ
BOOT VOLTAGE	1.7V	1.7V	1.7V
DC LOAD-LINE	1.5MOHM	2.0MOHM	2.0MOHM

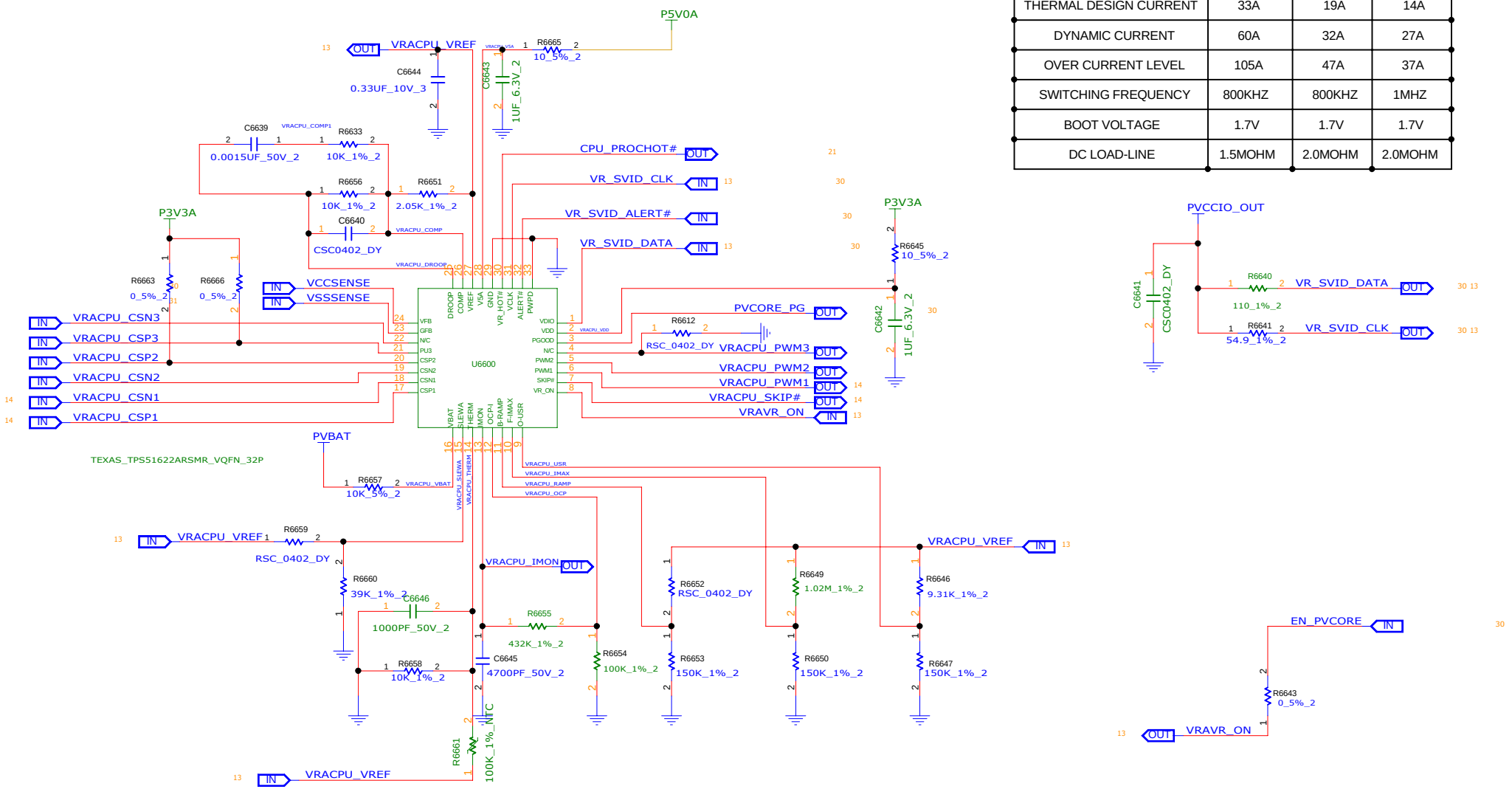

INVENTEC

TITLE
MODEL.PROJECT.FUNCTION
SYSTEM POWER(PVCORE&PVAXG-1)

SIZE	CODE	DOC.NUMBER	REV
A3	CS	1310A26357-0-0	X01

SHEET 13 of 64

CHANGE by	PUMA CHEN	DATE	4-NOV-2014
PCB P/N	6050A2635701	PCB VER	A02

WWW.ALIFIXIT.COM

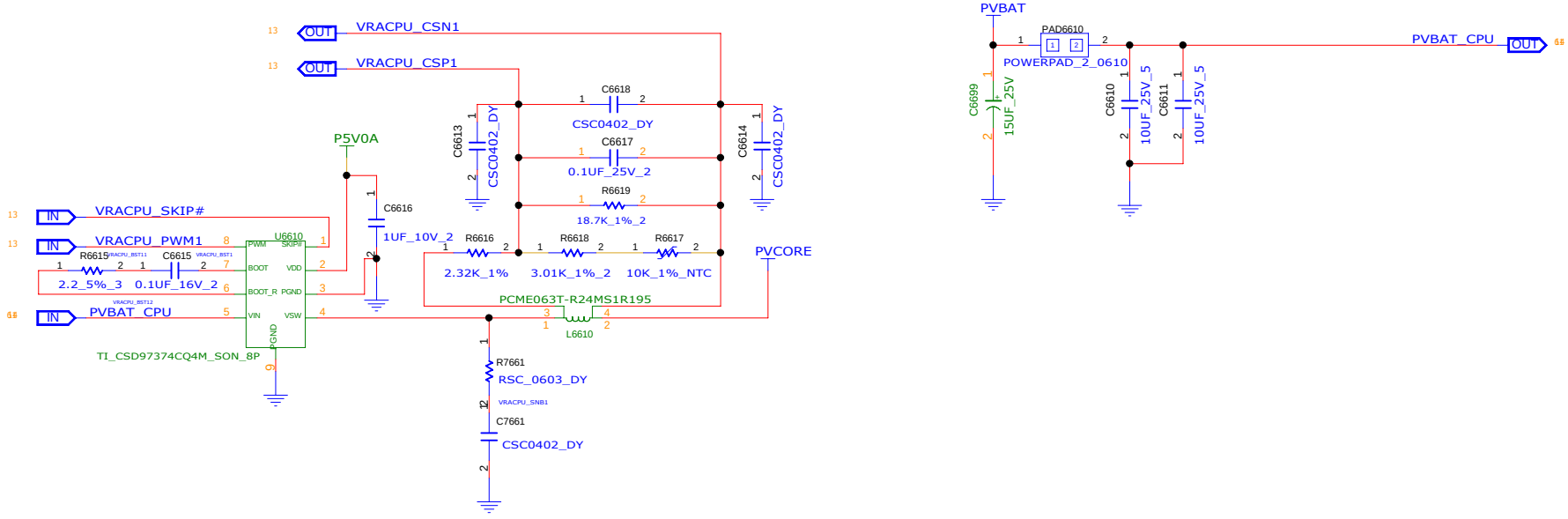

CHANGE by	PUMA_CHEN	DATE	4-NOV-2014
PCB P/N	6050A2635701	PCB VER	A02

INVENTEC

TITLE
MODEL,PROJECT,FUNCTION
SYSTEM POWER(VCORE&PVAXG-2)

SIZE	CODE	DOC.NUMBER	REV
A3	CS	1310A26357-0-0	X01

SHEET 14 of 64

WWW.ALISALER.COM

REFERENCE NUMER : 7000~7350

	PAD2990	Q7151	Q7150	Q7152	R7150	R7151	R7154
NON-IAMT	INSTALL	UN-INSTALL	UN-INSTALL	UN-INSTALL	UN-INSTALL	UN-INSTALL	UN-INSTALL
IAMT	UN-INSTALL	INSTALL	INSTALL	INSTALL	INSTALL	INSTALL	INSTALL

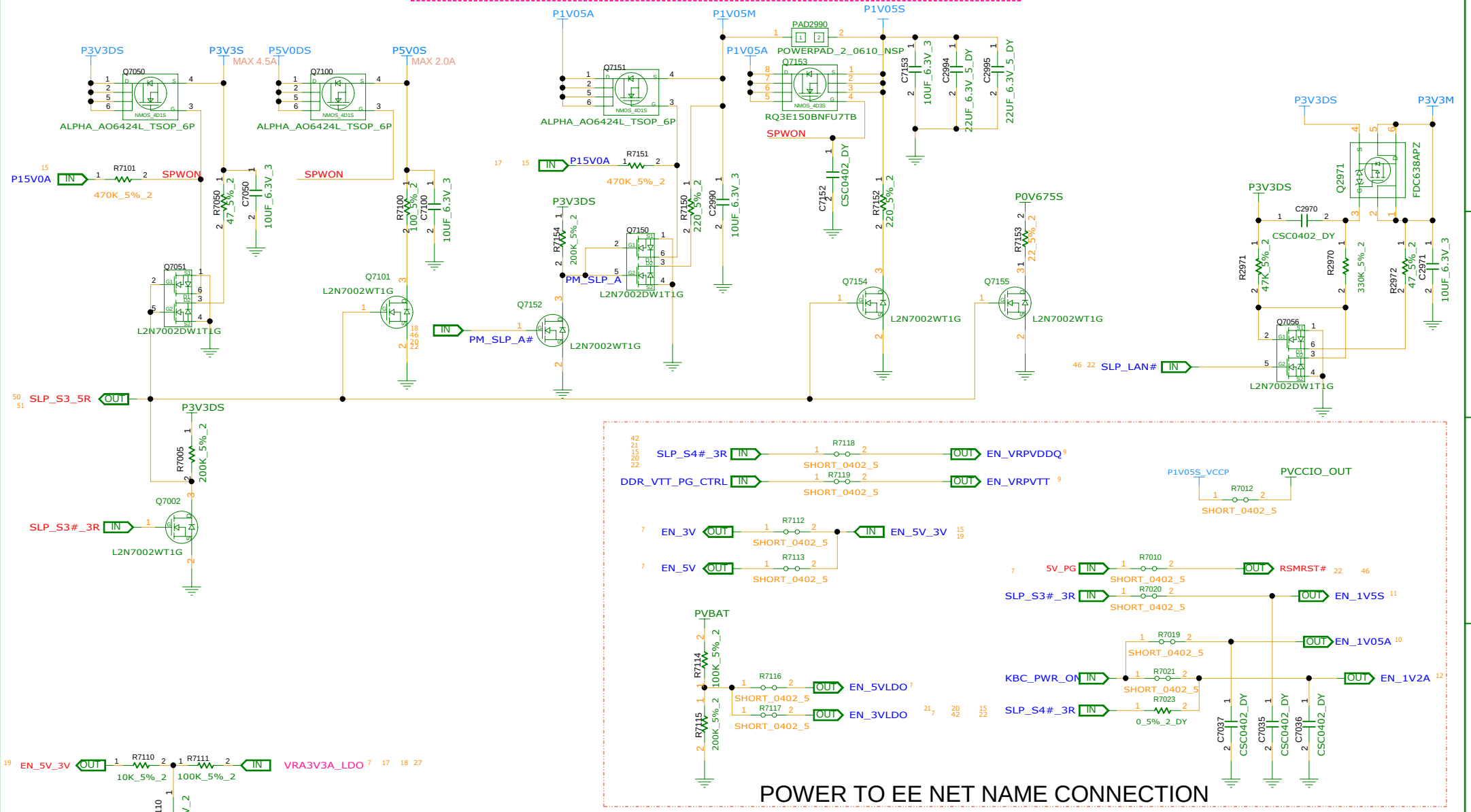

POWER TO EE NET NAME CONNECTION

FOR UMA MODE

UNINSTALL	D7001	R7031	C7031	R7032	C7039
	C7032	R7034	C7034	R7044	

INVENTEC

TITLE: MODEL,PROJECT,FUNCTION
POWER SEQUENCE(SLEEP)

SIZE	CODE	DOC.NUMBER	REV
A3	CS	1310A26357-0-0	X01

SHEET of 15 64

CHANGE by		DATE	
PCB P/N		PCB VER	4-NOV-2014

PCMA CHEN

WWW.ALIFIXIT.COM

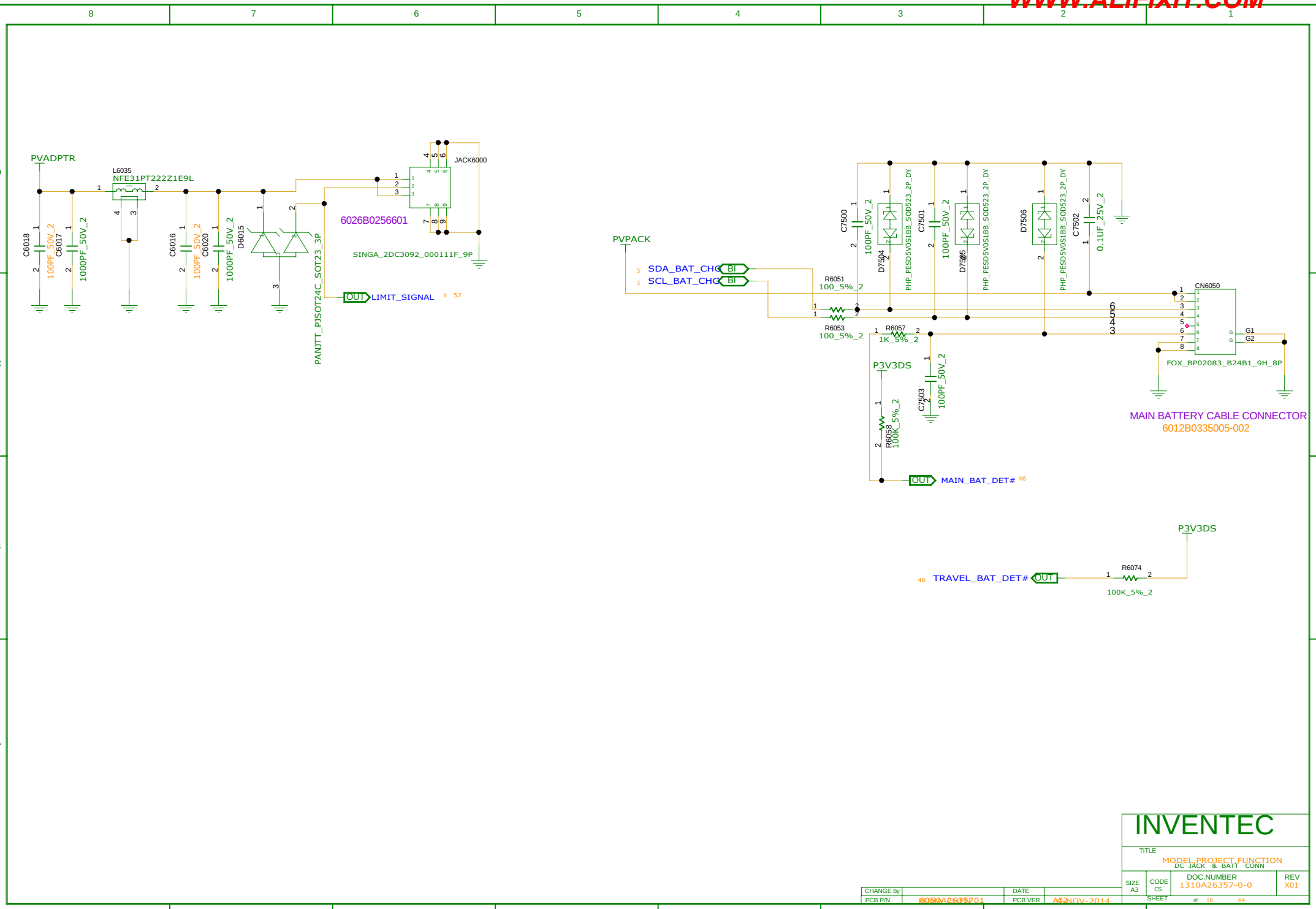

WWW.ALISALER.COM

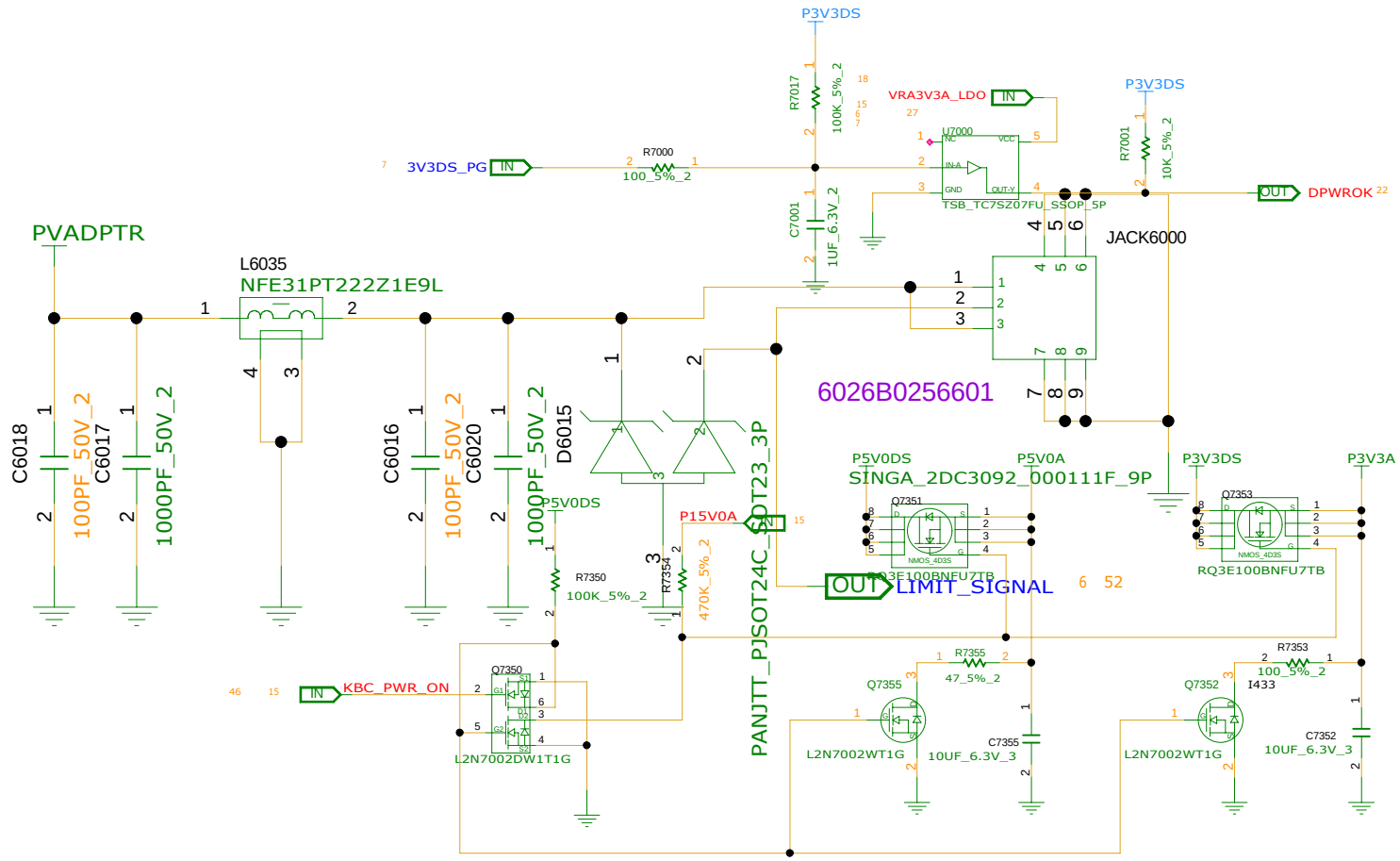

INVENTEC

TITLE: MODEL,PROJECT,FUNCTION POWER(SEQUENCE)

CHANGE by	PUMA_CHEN	DATE	4-NOV-2014
PCB P/N	6050A2635701	PCB VER	A02

SIZE	CODE	DOC.NUMBER	REV
A3	CS	1310A26357-0-0	X01

SHEET 17 of 64

WWW.ALIFIXIT.COM

REFERENCE NUMER : 7400~7450

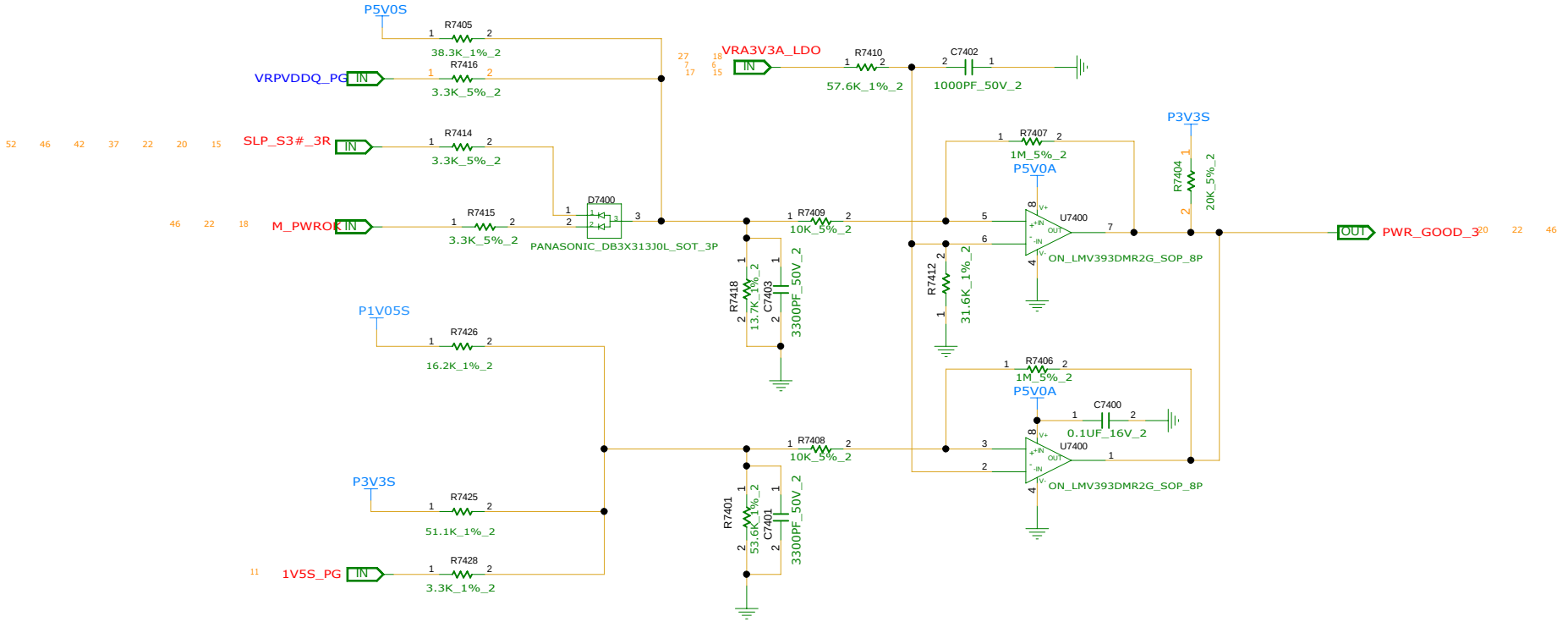

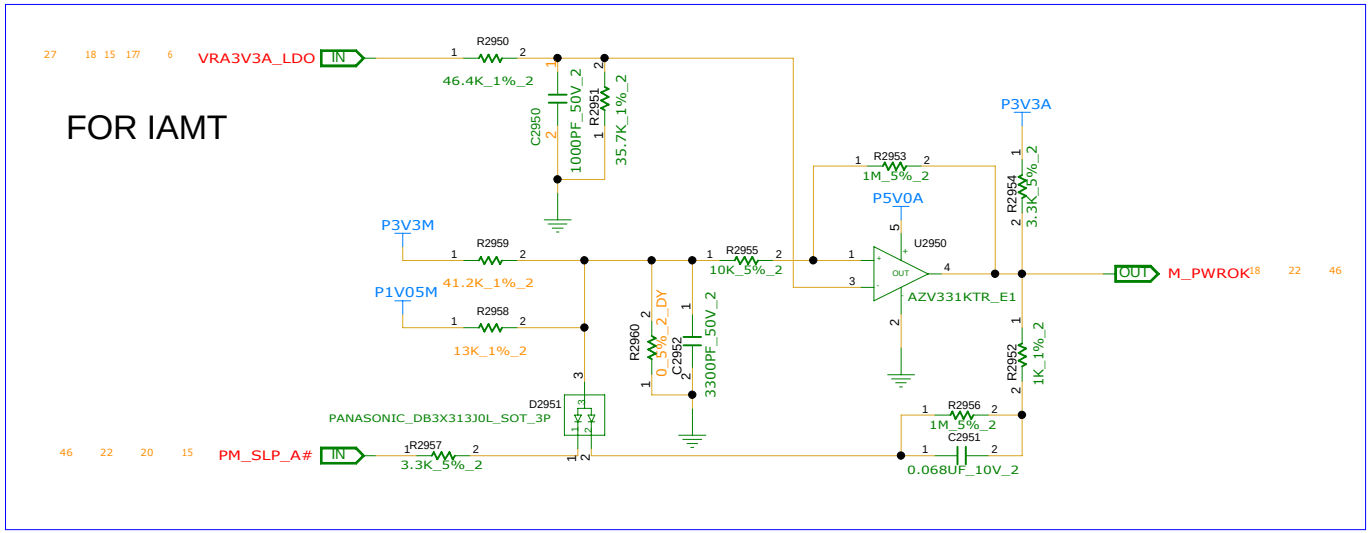

REFERENCE NUMER : 2950~2999

CHANGE by	PUMA_CHEN	DATE	4-NOV-2014
PCB P/N	6050A2635701	PCB VER	A02

INVENTEC

TITLE: MODEL,PROJECT,FUNCTION POWER(SEQUENCE)

SIZE	CODE	DOC.NUMBER	REV
A3	CS	1310A26357-0-0	X01

SHEET 18 of 64

WWW.ALISALER.COM

REFERENCE NUMBER:4400~4349

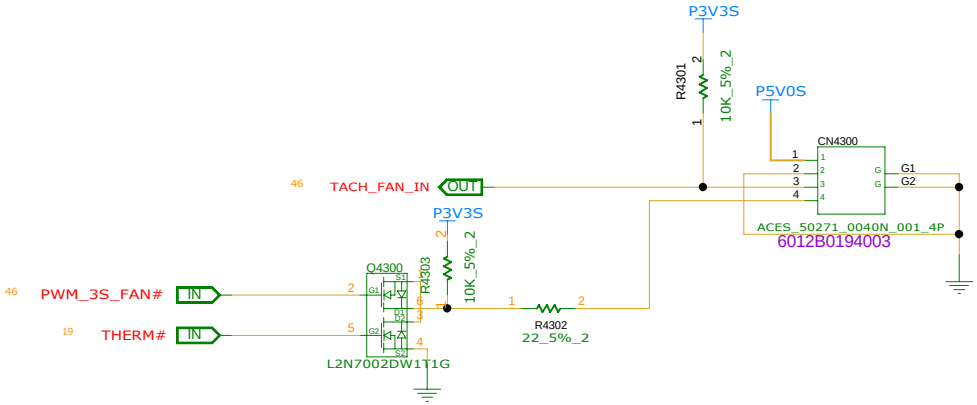

THERM SENSOR

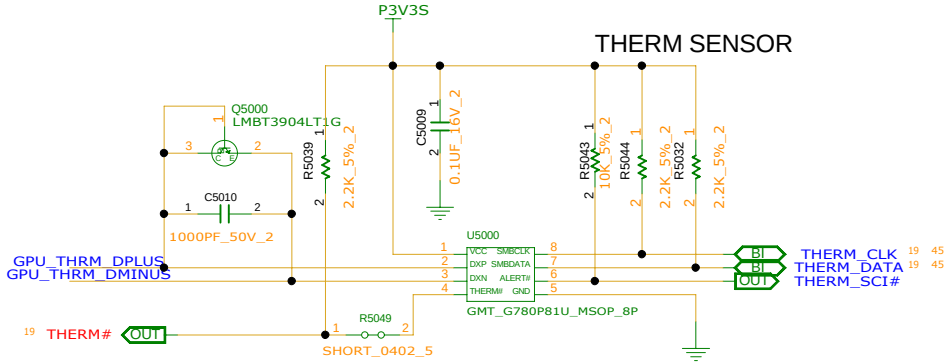

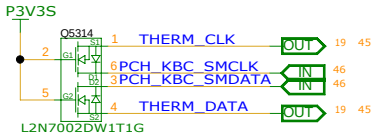

AMBIENT TEMP SENSE

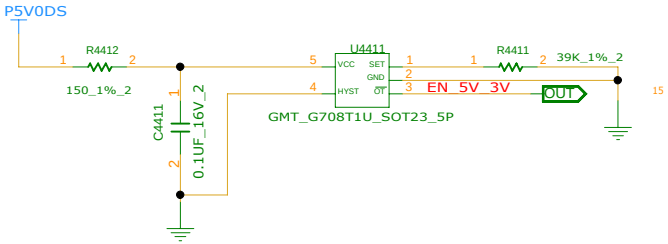

RSET (K OHM) = 0.0012T^2 - 0.9308T + 96.147
THERMAL SHUTDOWN AT 75 DEG.

FOR UMA MODE	
UNINSTALL	Q5315

REFERENCE NUMBER:4411~4449

INVENTEC

TITLE: MODEL PROJECT,FUNCTION
FAN & THERMAL

SIZE	CODE	DOC.NUMBER	REV
A3	CS	1310A26357-0-0	X01

SHEET 19 of 64

CHANGE by		DATE	
PCB P/N	50.0A26.001	PCB VER	A02

02-NOV-2014

WWW.ALIFIXIT.COM

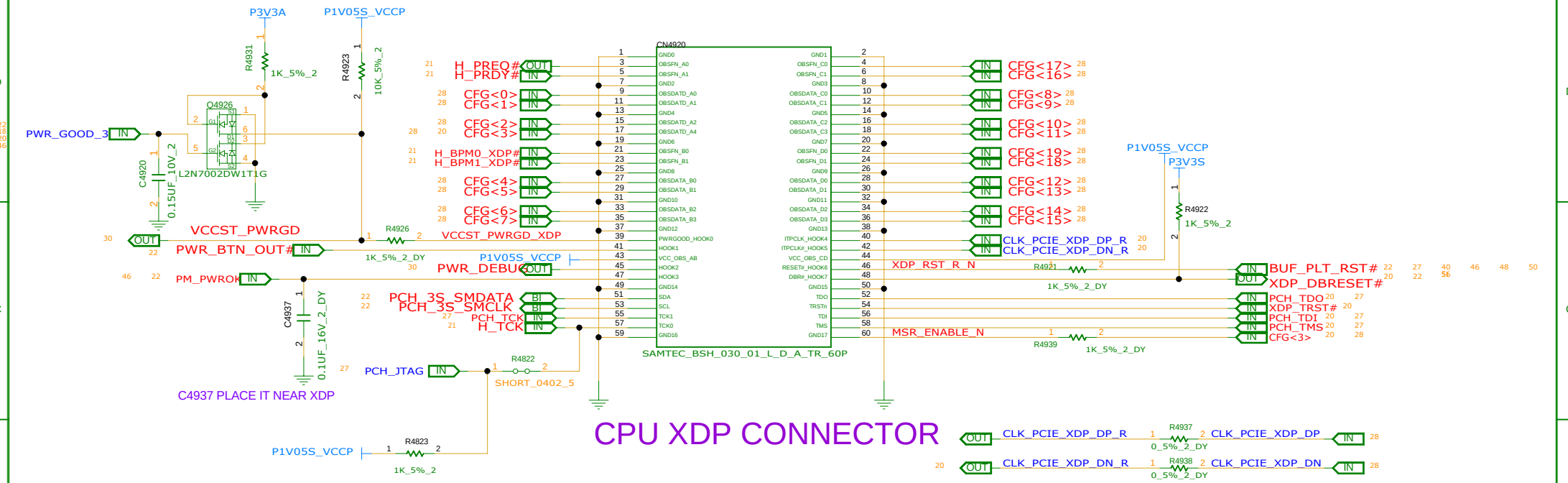

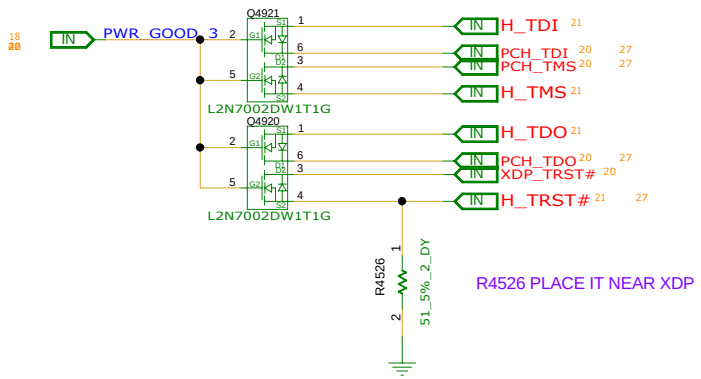

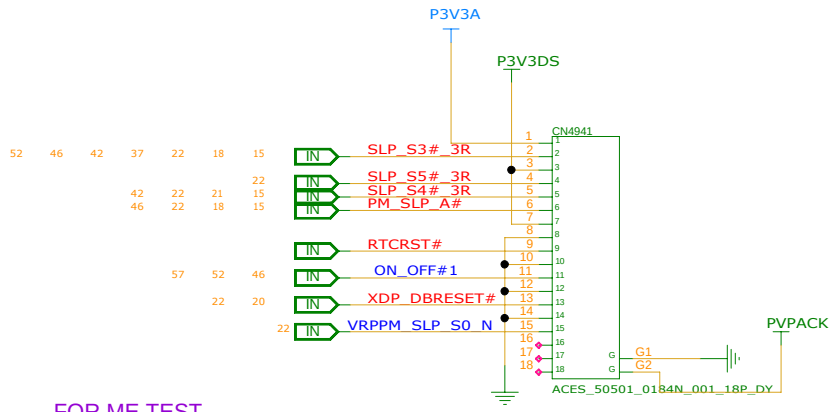

NEED TO BE PLACE BETWEEN KEYBOARD OR BOTTOM DOOR

INVENTEC			
TITLE: MODEL,PROJECT,FUNCTION XDP & ME CONN.			
SIZE A3	CODE CS	DOC.NUMBER 1310A26357-0-0	REV X01
SHEET 20 of 64			
CHANGE by		DATE	
PCB P/N	6050A2635701	PCB VER	A02 NOV-2014

WWW.ALISALER.COM

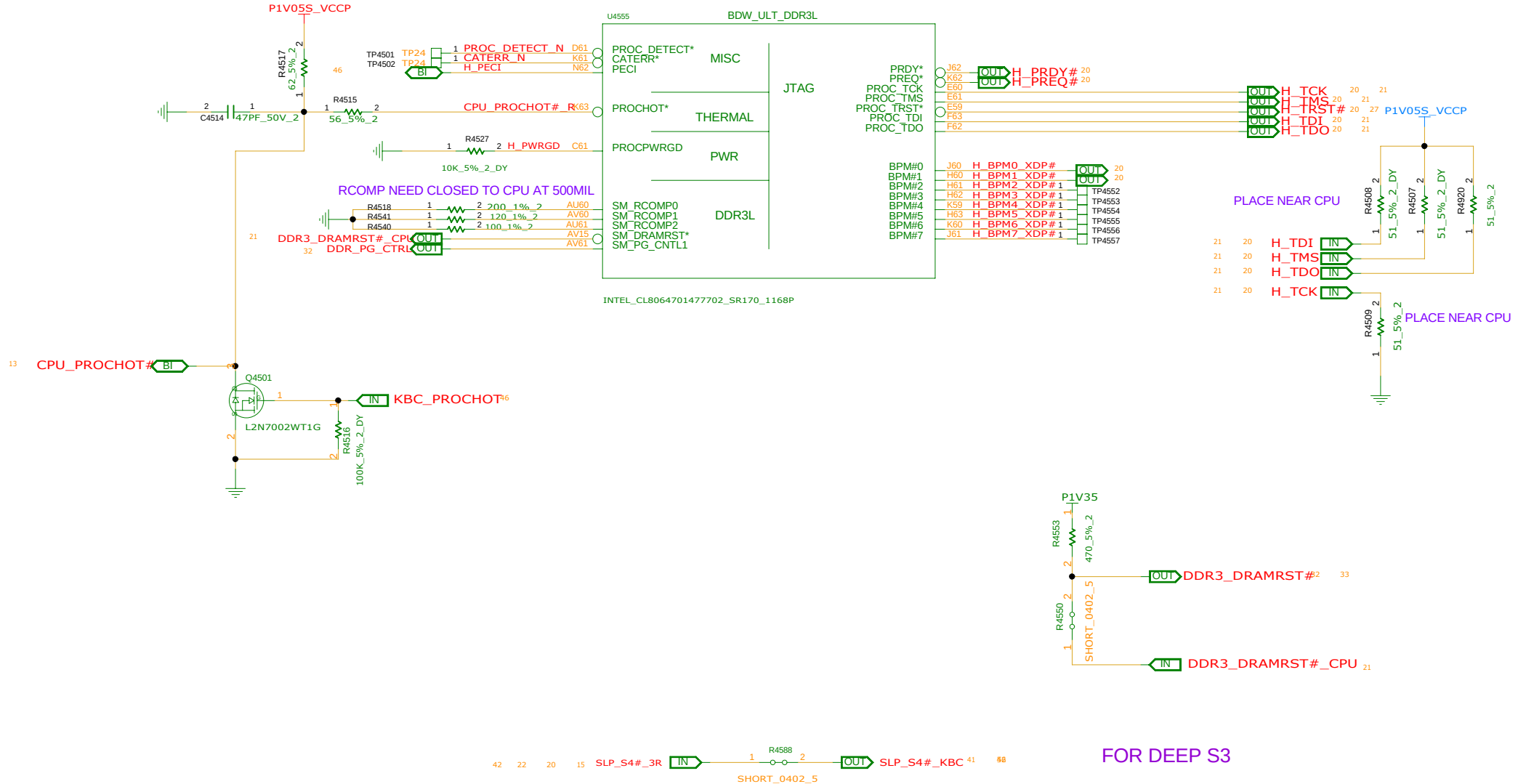

REFERENCE:4500~4949

CHANGE by	PUMA_CHEN	DATE	4-NOV-2014
PCB P/N	6050A2635701	PCB VER	A02

INVENTEC

TITLE: MODEL,PROJECT,FUNCTION
MCP1-MISC

SIZE	CODE	DOC.NUMBER	REV
A3	CS	1310A26357-0-0	X01

SHEET 21 of 64

WWW.ALIFIXIT.COM

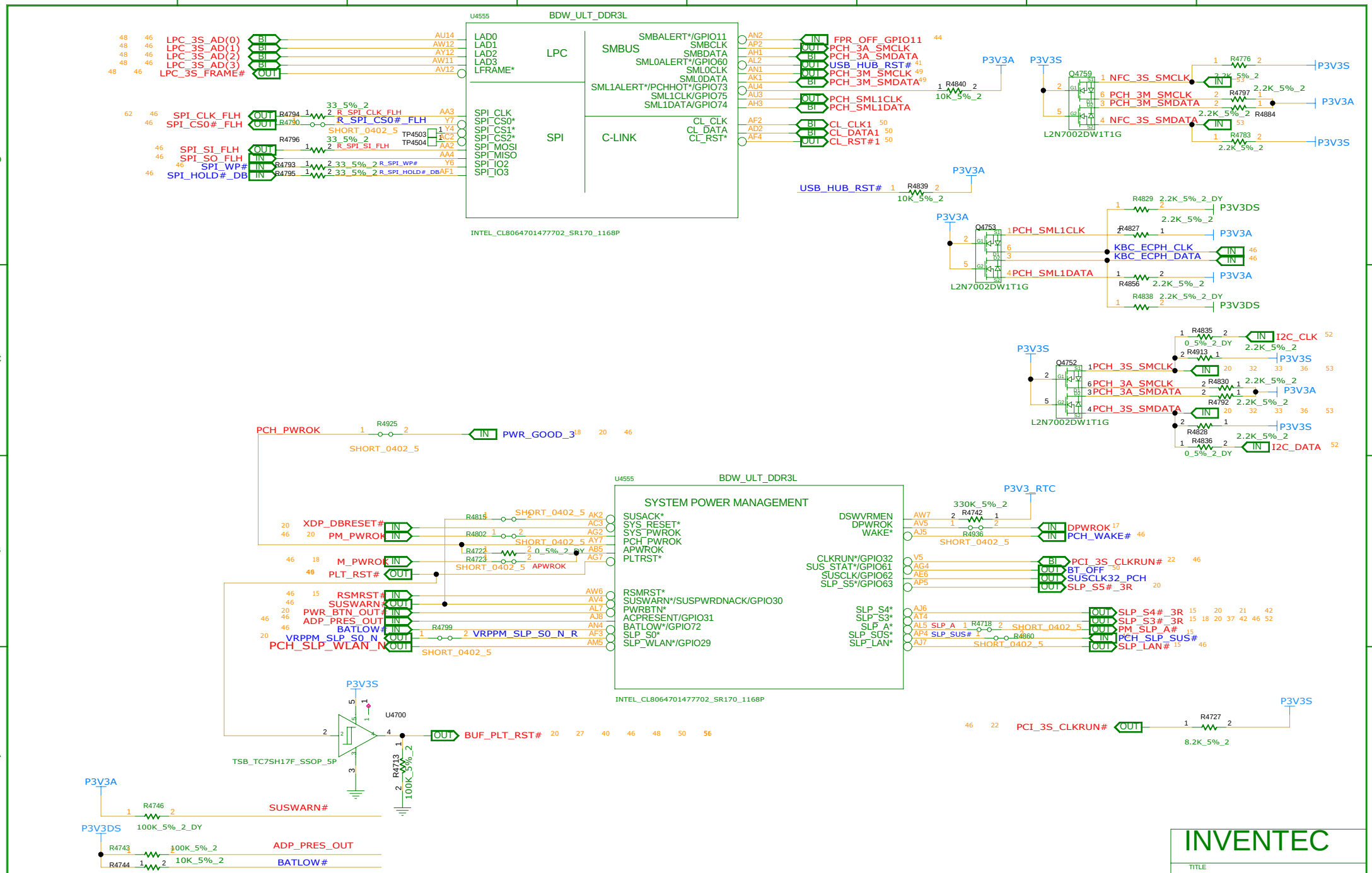

REFERENCE:4500~4949

WWW.ALISALER.COM

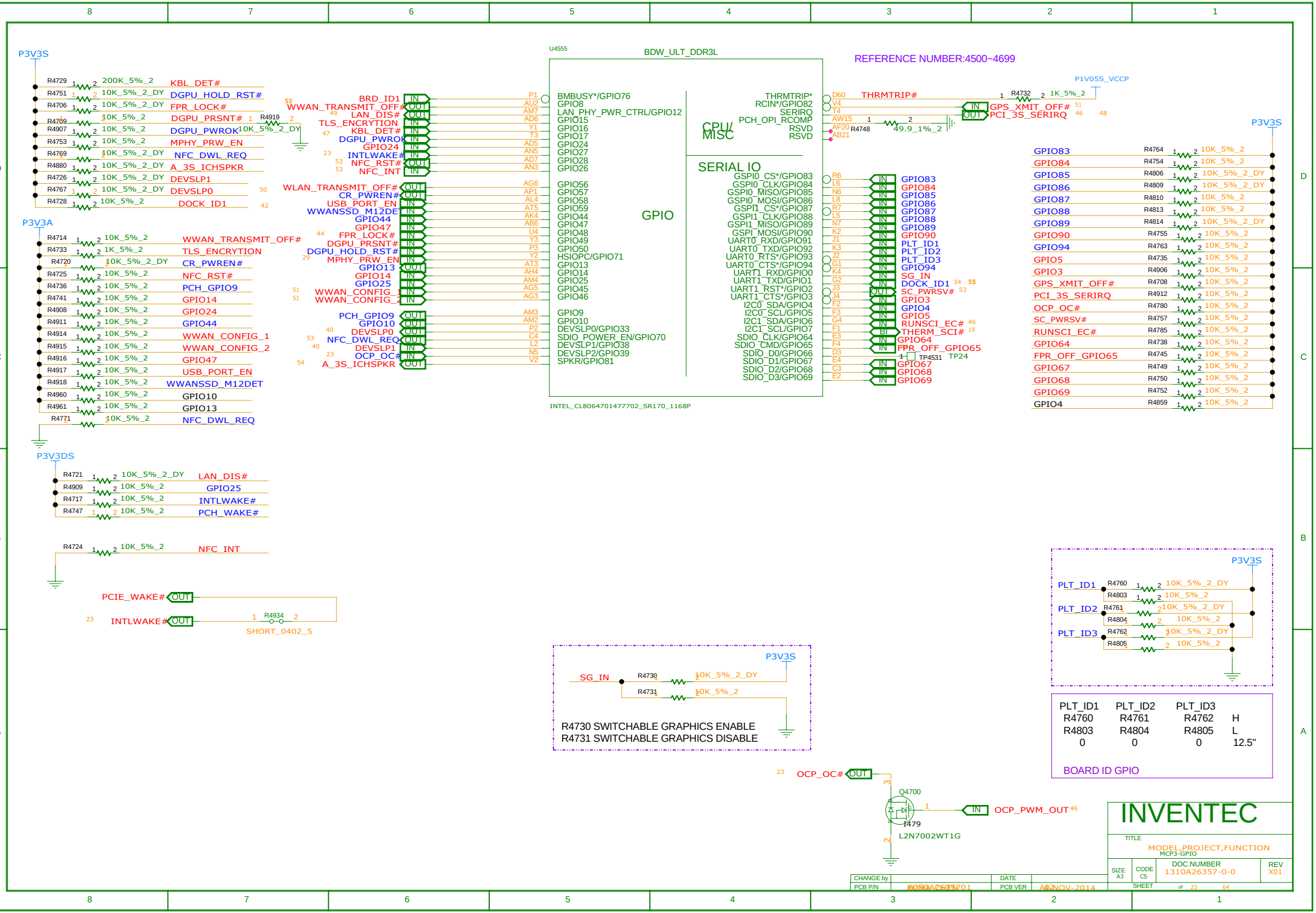
U4555
BDW_ULT_DDR3L
REFERENCE NUMBER:4500~4699
P3V3S
P3V3A
P3V3DS
P1V05S_VCCP
GPIO
CPU/ MISC
SERIAL IO
INTEL_CL8064701477702_SR170_1168P
KBL_DET#
DGPU_HOLD_RST#
FPR_LOCK#
DGPU_PRSNT#
DGPU_PWROK
MPHY_PRW_EN
NFC_DWL_REQ
A_3S_ICHSPKR
DEVSLP1
DEVSLP0
DOCK_ID1
WWAN_TRANSMIT_OFF#
TLS_ENCRYTION
CR_PWREN#
NFC_RST#
PCH_GPIO9
GPIO14
GPIO24
GPIO44
WWAN_CONFIG_1
WWAN_CONFIG_2
GPIO47
USB_PORT_EN
WWANSSD_M12DET
GPIO10
GPIO13
LAN_DIS#
GPIO25
INTLWAKE#
PCH_WAKE#
NFC_INT
PCIE_WAKE#
SHORT_0402_5
THRMTRIP#
GPS_XMIT_OFF#
PCI_3S_SERIRQ
GPIO83
GPIO84
GPIO85
GPIO86
GPIO87
GPIO88
GPIO89
GPIO90
PLT_ID1
PLT_ID2
PLT_ID3
SG_IN
DOCK_ID1
SC_PWRSV#
GPIO3
GPIO4
GPIO5
RUNSCI_EC#
THERM_SCI#
FPR_OFF_GPIO65
GPIO67
GPIO68
GPIO69
GPIO64
SG_IN
R4730 SWITCHABLE GRAPHICS ENABLE
R4731 SWITCHABLE GRAPHICS DISABLE
OCP_OC#
OCP_PWM_OUT
Q4700
L2N7002WT1G
BOARD ID GPIO
INVENTEC
MODEL,PROJECT,FUNCTION
MCP3-GPIO
DOC.NUMBER
1310A26357-0-0
REV
X01
SIZE
A3
CODE
CS
SHEET
CHANGE by
PCB P/N
DATE
PCB VER
02-NOV-2014

WWW.ALIFIXIT.COM

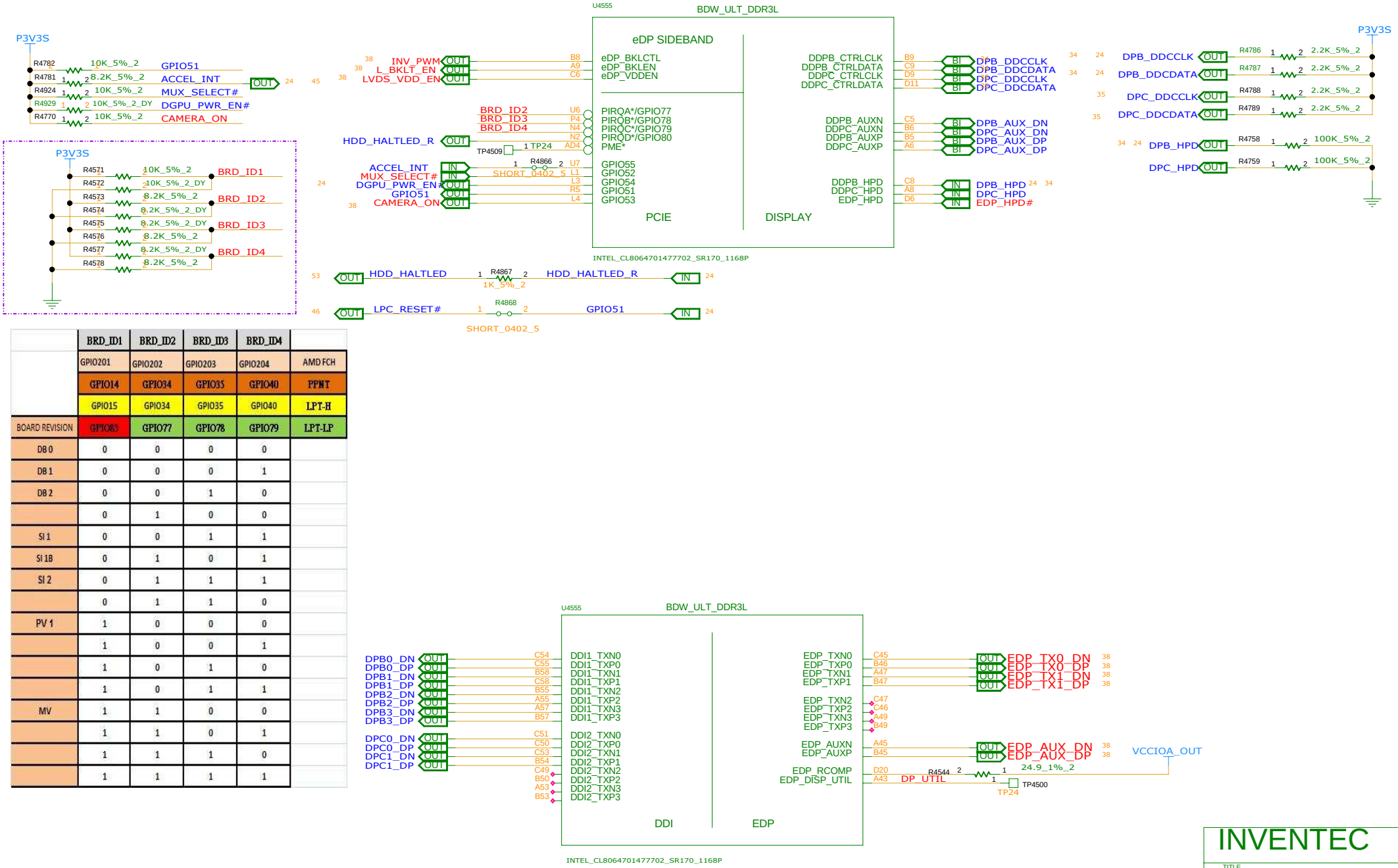

	BRD_ID1	BRD_ID2	BRD_ID3	BRD_ID4	
	GPIO201	GPIO202	GPIO203	GPIO204	AMD FCH
	GPIO14	GPIO34	GPIO35	GPIO40	PPNT
	GPIO15	GPIO34	GPIO35	GPIO40	LPT-H
BOARD REVISION	GPIO83	GPIO77	GPIO78	GPIO79	LPT-LP
DB 0	0	0	0	0	
DB 1	0	0	0	1	
DB 2	0	0	1	0	
	0	1	0	0	
SI 1	0	0	1	1	
SI 1B	0	1	0	1	
SI 2	0	1	1	1	
	0	1	1	0	
PV 1	1	0	0	0	
	1	0	0	1	
	1	0	1	0	
	1	0	1	1	
MV	1	1	0	0	
	1	1	0	1	
	1	1	1	0	
	1	1	1	1	

REFERENCE:4500~4949

INVENTEC

TITLE MODEL,PROJECT,FUNCTION
MCP4-GPIO,DP

SIZE	CODE	DOC.NUMBER	REV
A3	CS	1310A26357-0-0	X01

SHEET 24 of 64

CHANGE by		DATE	
PCB P/N	60.0A26.001	PCB VER	A02

WWW.ALISALER.COM

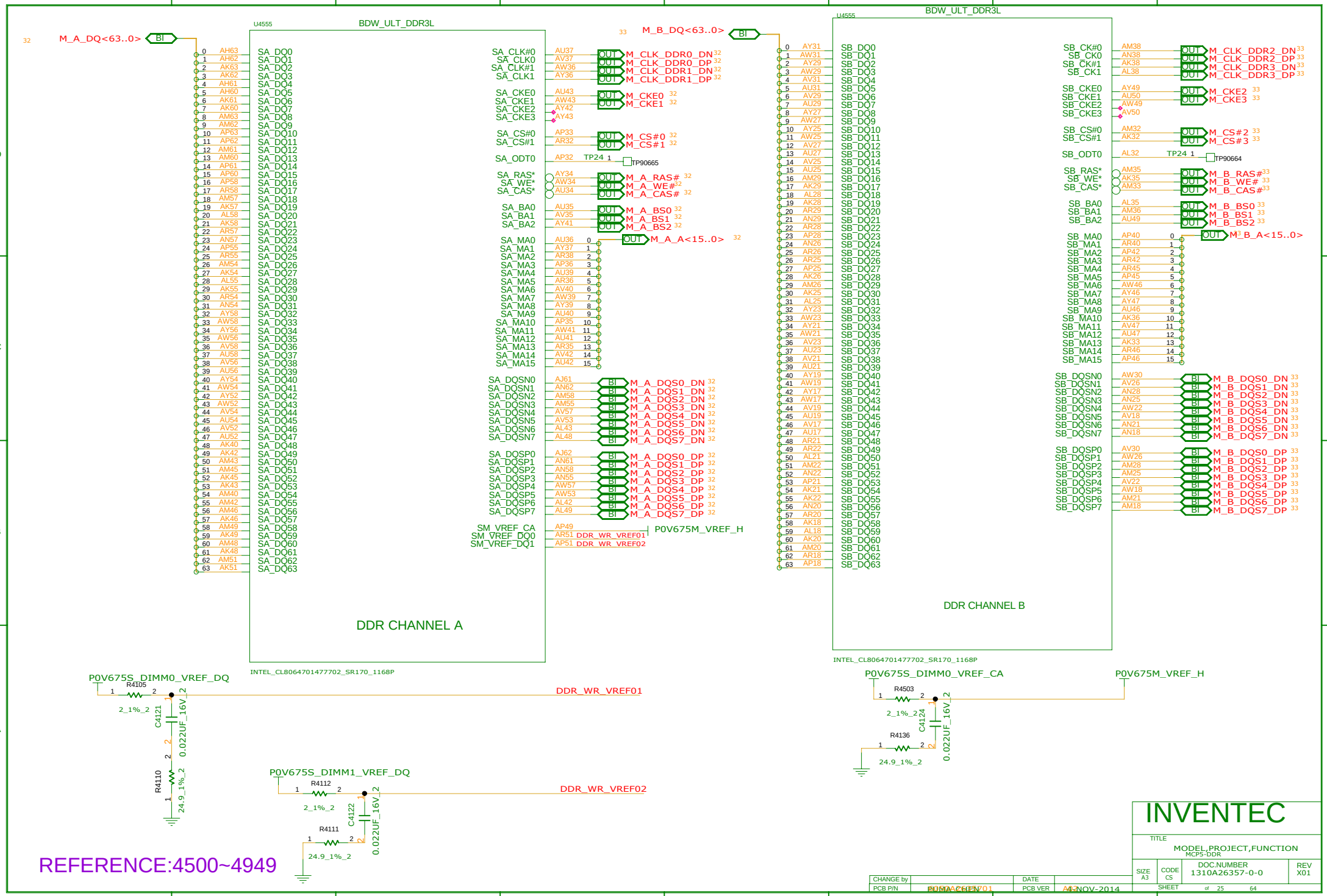
U4555
BDW_ULT_DDR3L
M_A_DQ<63..0>
SA_DQ0 SA_DQ1 SA_DQ2 SA_DQ3 SA_DQ4 SA_DQ5 SA_DQ6 SA_DQ7 SA_DQ8 SA_DQ9 SA_DQ10 SA_DQ11 SA_DQ12 SA_DQ13 SA_DQ14 SA_DQ15 SA_DQ16 SA_DQ17 SA_DQ18 SA_DQ19 SA_DQ20 SA_DQ21 SA_DQ22 SA_DQ23 SA_DQ24 SA_DQ25 SA_DQ26 SA_DQ27 SA_DQ28 SA_DQ29 SA_DQ30 SA_DQ31 SA_DQ32 SA_DQ33 SA_DQ34 SA_DQ35 SA_DQ36 SA_DQ37 SA_DQ38 SA_DQ39 SA_DQ40 SA_DQ41 SA_DQ42 SA_DQ43 SA_DQ44 SA_DQ45 SA_DQ46 SA_DQ47 SA_DQ48 SA_DQ49 SA_DQ50 SA_DQ51 SA_DQ52 SA_DQ53 SA_DQ54 SA_DQ55 SA_DQ56 SA_DQ57 SA_DQ58 SA_DQ59 SA_DQ60 SA_DQ61 SA_DQ62 SA_DQ63
SA_CLK#0 SA_CLK0 SA_CLK#1 SA_CLK1
M_CLK_DDR0_DN M_CLK_DDR0_DP M_CLK_DDR1_DN M_CLK_DDR1_DP
SA_CKE0 SA_CKE1 SA_CKE2 SA_CKE3
M_CKE0 M_CKE1
SA_CS#0 SA_CS#1
M_CS#0 M_CS#1
SA_ODT0
TP90665
SA_RAS* SA_WE* SA_CAS*
M_A_RAS# M_A_WE# M_A_CAS#
SA_BA0 SA_BA1 SA_BA2
M_A_BS0 M_A_BS1 M_A_BS2
SA_MA0 SA_MA1 SA_MA2 SA_MA3 SA_MA4 SA_MA5 SA_MA6 SA_MA7 SA_MA8 SA_MA9 SA_MA10 SA_MA11 SA_MA12 SA_MA13 SA_MA14 SA_MA15
M_A_A<15..0>
SA_DQSN0 SA_DQSN1 SA_DQSN2 SA_DQSN3 SA_DQSN4 SA_DQSN5 SA_DQSN6 SA_DQSN7
M_A_DQS0_DN M_A_DQS1_DN M_A_DQS2_DN M_A_DQS3_DN M_A_DQS4_DN M_A_DQS5_DN M_A_DQS6_DN M_A_DQS7_DN
SA_DQSP0 SA_DQSP1 SA_DQSP2 SA_DQSP3 SA_DQSP4 SA_DQSP5 SA_DQSP6 SA_DQSP7
M_A_DQS0_DP M_A_DQS1_DP M_A_DQS2_DP M_A_DQS3_DP M_A_DQS4_DP M_A_DQS5_DP M_A_DQS6_DP M_A_DQS7_DP
SM_VREF_CA SM_VREF_DQ0 SM_VREF_DQ1
P0V675M_VREF_H
DDR_WR_VREF01
DDR_WR_VREF02
DDR CHANNEL A
INTEL_CL8064701477702_SR170_1168P
M_B_DQ<63..0>
SB_DQ0 SB_DQ1 SB_DQ2 SB_DQ3 SB_DQ4 SB_DQ5 SB_DQ6 SB_DQ7 SB_DQ8 SB_DQ9 SB_DQ10 SB_DQ11 SB_DQ12 SB_DQ13 SB_DQ14 SB_DQ15 SB_DQ16 SB_DQ17 SB_DQ18 SB_DQ19 SB_DQ20 SB_DQ21 SB_DQ22 SB_DQ23 SB_DQ24 SB_DQ25 SB_DQ26 SB_DQ27 SB_DQ28 SB_DQ29 SB_DQ30 SB_DQ31 SB_DQ32 SB_DQ33 SB_DQ34 SB_DQ35 SB_DQ36 SB_DQ37 SB_DQ38 SB_DQ39 SB_DQ40 SB_DQ41 SB_DQ42 SB_DQ43 SB_DQ44 SB_DQ45 SB_DQ46 SB_DQ47 SB_DQ48 SB_DQ49 SB_DQ50 SB_DQ51 SB_DQ52 SB_DQ53 SB_DQ54 SB_DQ55 SB_DQ56 SB_DQ57 SB_DQ58 SB_DQ59 SB_DQ60 SB_DQ61 SB_DQ62 SB_DQ63
SB_CK#0 SB_CK0 SB_CK#1 SB_CK1
M_CLK_DDR2_DN M_CLK_DDR2_DP M_CLK_DDR3_DN M_CLK_DDR3_DP
SB_CKE0 SB_CKE1 SB_CKE2 SB_CKE3
M_CKE2 M_CKE3
SB_CS#0 SB_CS#1
M_CS#2 M_CS#3
SB_ODT0
TP90664
SB_RAS* SB_WE* SB_CAS*
M_B_RAS# M_B_WE# M_B_CAS#
SB_BA0 SB_BA1 SB_BA2
M_B_BS0 M_B_BS1 M_B_BS2
SB_MA0 SB_MA1 SB_MA2 SB_MA3 SB_MA4 SB_MA5 SB_MA6 SB_MA7 SB_MA8 SB_MA9 SB_MA10 SB_MA11 SB_MA12 SB_MA13 SB_MA14 SB_MA15
M_B_A<15..0>
SB_DQSN0 SB_DQSN1 SB_DQSN2 SB_DQSN3 SB_DQSN4 SB_DQSN5 SB_DQSN6 SB_DQSN7
M_B_DQS0_DN M_B_DQS1_DN M_B_DQS2_DN M_B_DQS3_DN M_B_DQS4_DN M_B_DQS5_DN M_B_DQS6_DN M_B_DQS7_DN
SB_DQSP0 SB_DQSP1 SB_DQSP2 SB_DQSP3 SB_DQSP4 SB_DQSP5 SB_DQSP6 SB_DQSP7
M_B_DQS0_DP M_B_DQS1_DP M_B_DQS2_DP M_B_DQS3_DP M_B_DQS4_DP M_B_DQS5_DP M_B_DQS6_DP M_B_DQS7_DP
DDR CHANNEL B
INTEL_CL8064701477702_SR170_1168P
P0V675S_DIMM0_VREF_DQ
R4105 2_1%_2
C4121 0.022UF_16V_2
R4110 24.9_1%_2
P0V675S_DIMM1_VREF_DQ
R4112 2_1%_2
C4122 0.022UF_16V_2
R4111 24.9_1%_2
P0V675S_DIMM0_VREF_CA
R4503 2_1%_2
C4124 0.022UF_16V_2
R4136 24.9_1%_2
P0V675M_VREF_H
REFERENCE:4500~4949
INVENTEC
TITLE
MODEL,PROJECT,FUNCTION
MCP5-DDR
SIZE A3
CODE CS
DOC.NUMBER 1310A26357-0-0
REV X01
SHEET of 25 64
CHANGE by
PCB P/N
DATE
PCB VER
12-NOV-2014

WWW.ALIFIXIT.COM

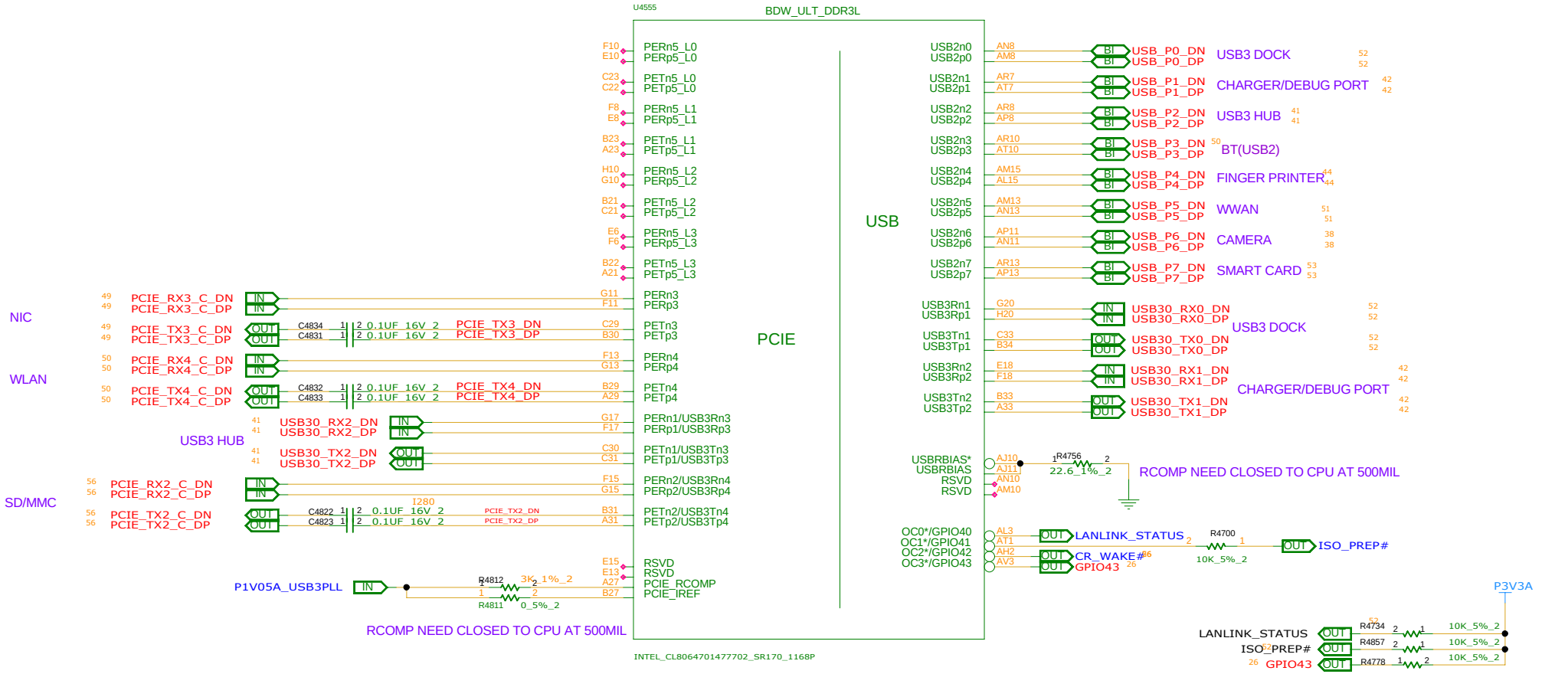

REFERENCE:4700~4949

INVENTEC

TITLE
MODEL,PROJECT,FUNCTION
MCP6-PCIE,USB

SIZE	CODE	DOC.NUMBER	REV
A3	CS	1310A26357-0-0	X01

SHEET 26 of 64

CHANGE by	PUMA_CHEN	DATE	4-NOV-2014
PCB P/N	6050A2635701	PCB VER	A02

WWW.ALISALER.COM

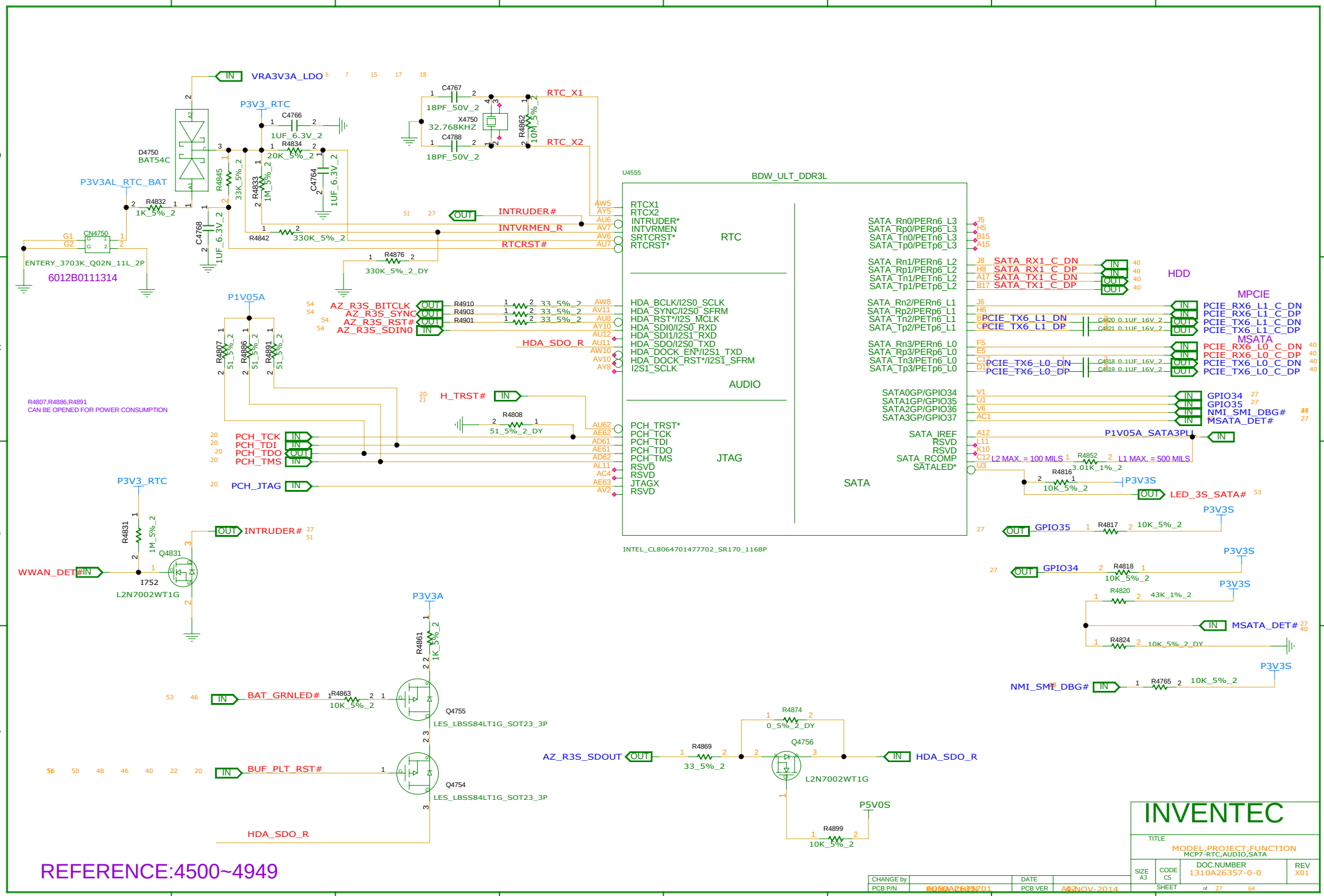
VRA3V3A_LDO
P3V3_RTC
C4766
1UF_6.3V_2
R4834
20K_5%_2
D4750
BAT54C
P3V3AL_RTC_BAT
R4832
1K_5%_2
CN4750
ENTERY_3703K_Q02N_11L_2P
6012B0111314
R4845
33K_5%_2
R4833
1M_5%_2
C4764
1UF_6.3V_2
C4768
1UF_6.3V_2
R4842
330K_5%_2
R4876
330K_5%_2_DY
C4767
18PF_50V_2
X4750
32.768KHZ
C4788
18PF_50V_2
R4862
10M_5%_2
RTC_X1
RTC_X2
U4555
BDW_ULT_DDR3L
INTRUDER#
INTVRMEN_R
RTCRST#
RTC
AZ_R3S_BITCLK
AZ_R3S_SYNC
AZ_R3S_RST#
AZ_R3S_SDIN0
R4910
R4903
R4901
33_5%_2
HDA_SDO_R
AUDIO
P1V05A
R4807
R4886
R4891
51_5%_2
R4807,R4886,R4891
CAN BE OPENED FOR POWER CONSUMPTION
H_TRST#
R4808
51_5%_2_DY
PCH_TCK
PCH_TDI
PCH_TDO
PCH_TMS
PCH_JTAG
JTAG
SATA
HDD
MPCIE
MSATA
PCIE_TX6_L1_DN
PCIE_TX6_L1_DP
PCIE_TX6_L0_DN
PCIE_TX6_L0_DP
PCIE_RX6_L1_C_DN
PCIE_RX6_L1_C_DP
PCIE_TX6_L1_C_DN
PCIE_TX6_L1_C_DP
PCIE_RX6_L0_C_DN
PCIE_RX6_L0_C_DP
PCIE_TX6_L0_C_DN
PCIE_TX6_L0_C_DP
SATA_RX1_C_DN
SATA_RX1_C_DP
SATA_TX1_C_DN
SATA_TX1_C_DP
GPIO34
GPIO35
NMI_SMI_DBG#
MSATA_DET#
P1V05A_SATA3PLL
L2 MAX. = 100 MILS
L1 MAX. = 500 MILS
R4852
3.01K_1%_2
R4816
10K_5%_2
P3V3S
LED_3S_SATA#
R4817
10K_5%_2
R4818
10K_5%_2
R4820
43K_1%_2
R4824
10K_5%_2_DY
R4765
10K_5%_2
INTEL_CL8064701477702_SR170_1168P
R4831
1M_5%_2
Q4831
WWAN_DET#
L2N7002WT1G
P3V3A
R4861
1K_5%_2
BAT_GRNLED#
R4863
10K_5%_2
Q4755
LES_LBSS84LT1G_SOT23_3P
BUF_PLT_RST#
Q4754
LES_LBSS84LT1G_SOT23_3P
HDA_SDO_R
AZ_R3S_SDOUT
R4869
33_5%_2
R4874
0_5%_2_DY
Q4756
L2N7002WT1G
P5V0S
R4899
10K_5%_2
REFERENCE:4500~4949
INVENTEC
TITLE
MODEL,PROJECT,FUNCTION
MCP7-RTC,AUDIO,SATA
SIZE A3
CODE CS
DOC.NUMBER 1310A26357-0-0
REV X01
SHEET 27 of 64
CHANGE by
PCB P/N
DATE
PCB VER
02-NOV-2014

WWW.ALIFIXIT.COM

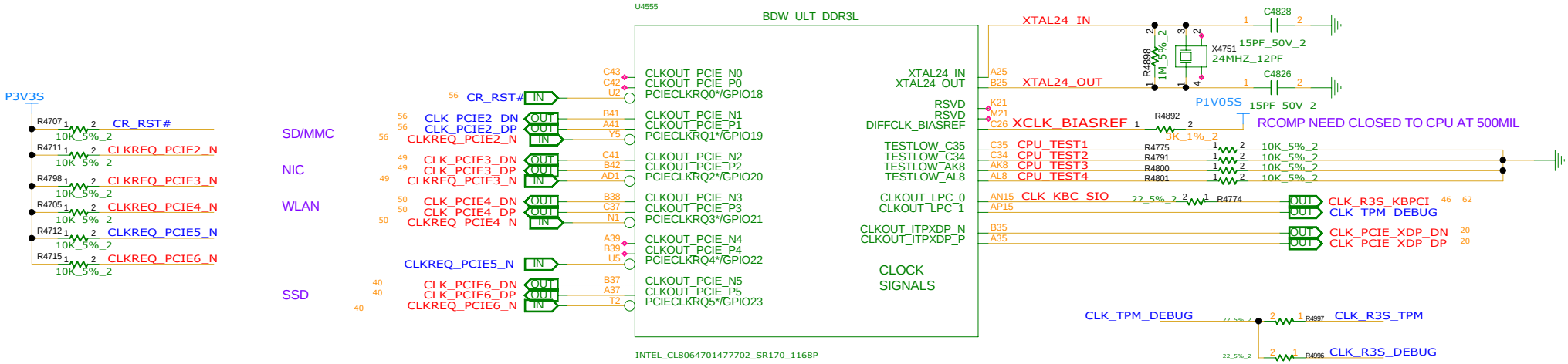

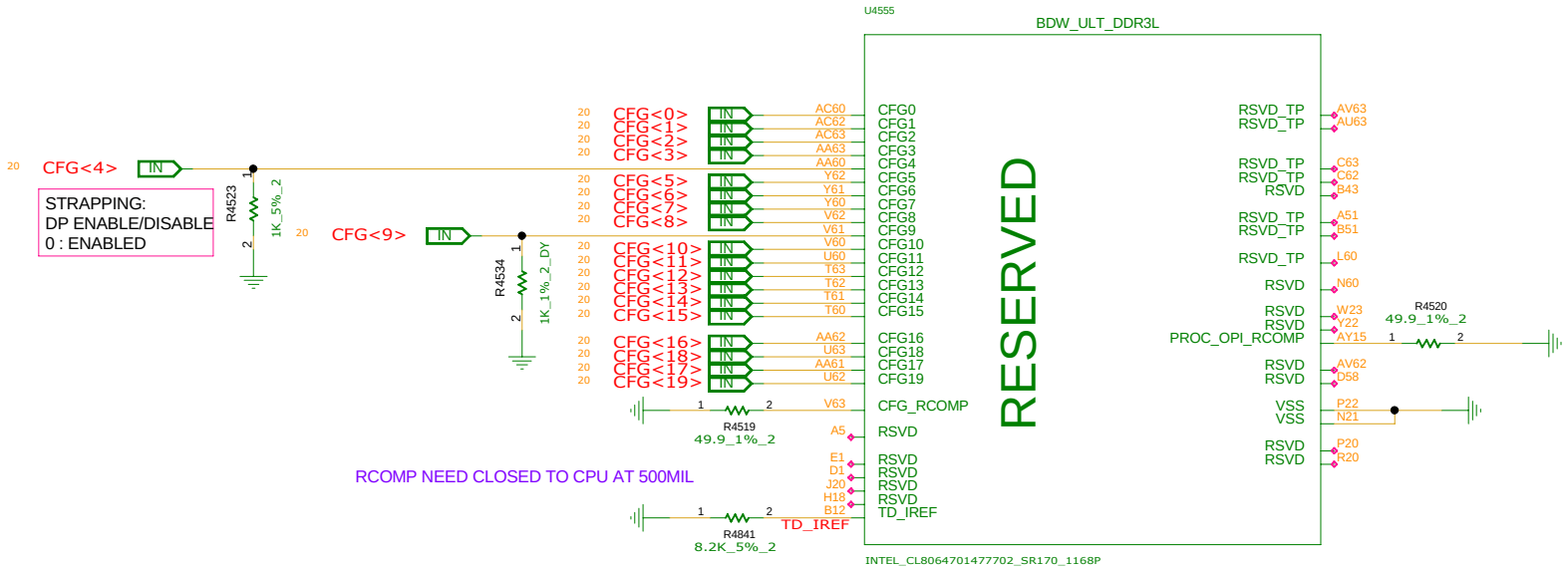

REFERENCE:4500~4949

CHANGE by		DATE	
PCB P/N	60.0A26.001	PCB VER	A02

INVENTEC

TITLE: MODEL,PROJECT,FUNCTION
MCP8-CLOCK,RESERVED

SIZE	CODE	DOC.NUMBER	REV
A3	CS	1310A26357-0-0	X01

SHEET 28 of 64

WWW.ALISALER.COM

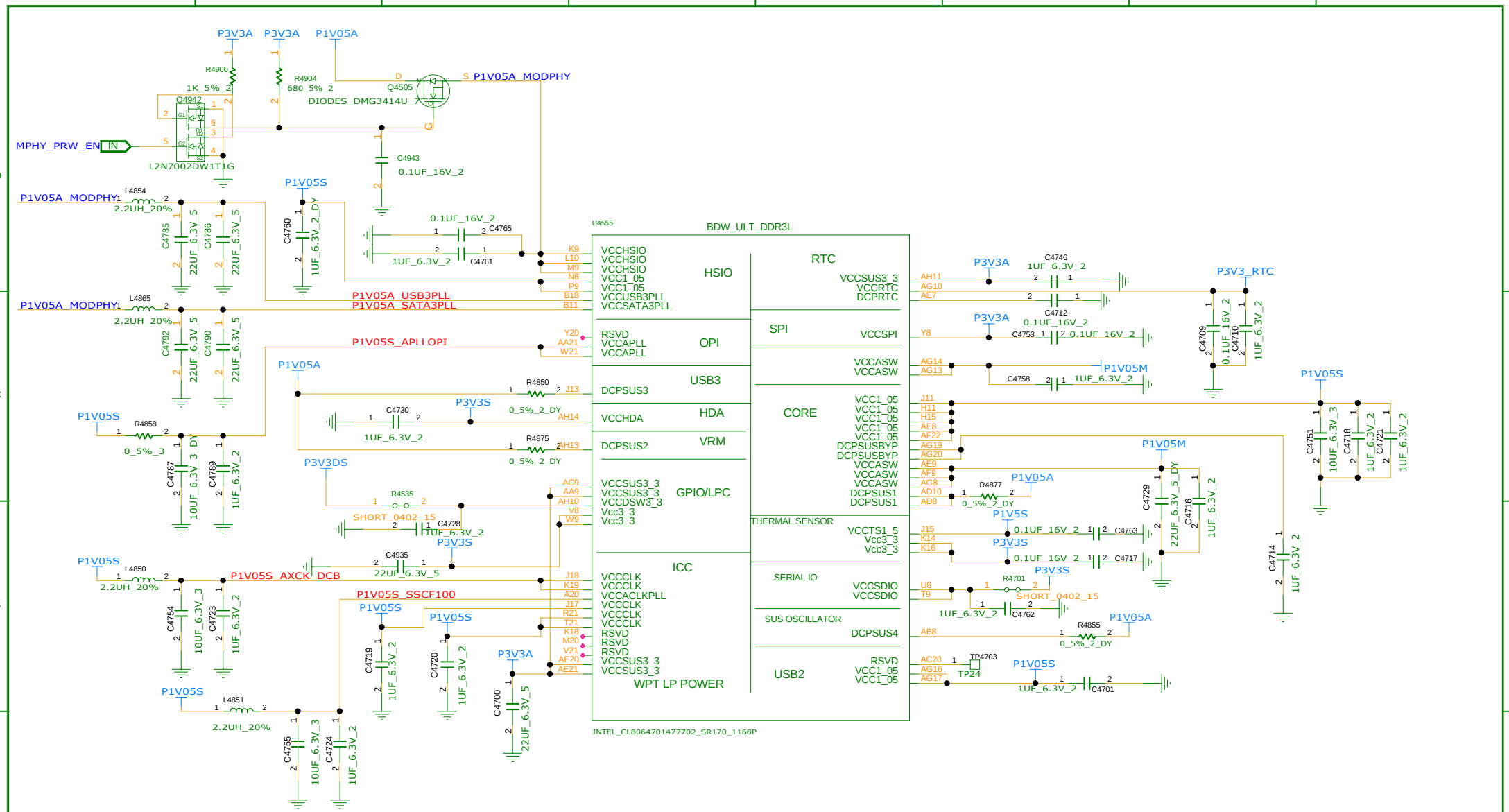

REFERENCE:4500~4949

INVENTEC

TITLE
MODEL,PROJECT,FUNCTION
MCP9-POWER

SIZE	CODE	DOC.NUMBER	REV
A3	CS	1310A26357-0-0	X01

SHEET of 29 64

CHANGE by		DATE	
PCB P/N	[illegible]	PCB VER	A02

02-NOV-2014

WWW.ALIFIXIT.COM

ROUTE VCCSENSE WITH 27.4OHM IMPEDANCE

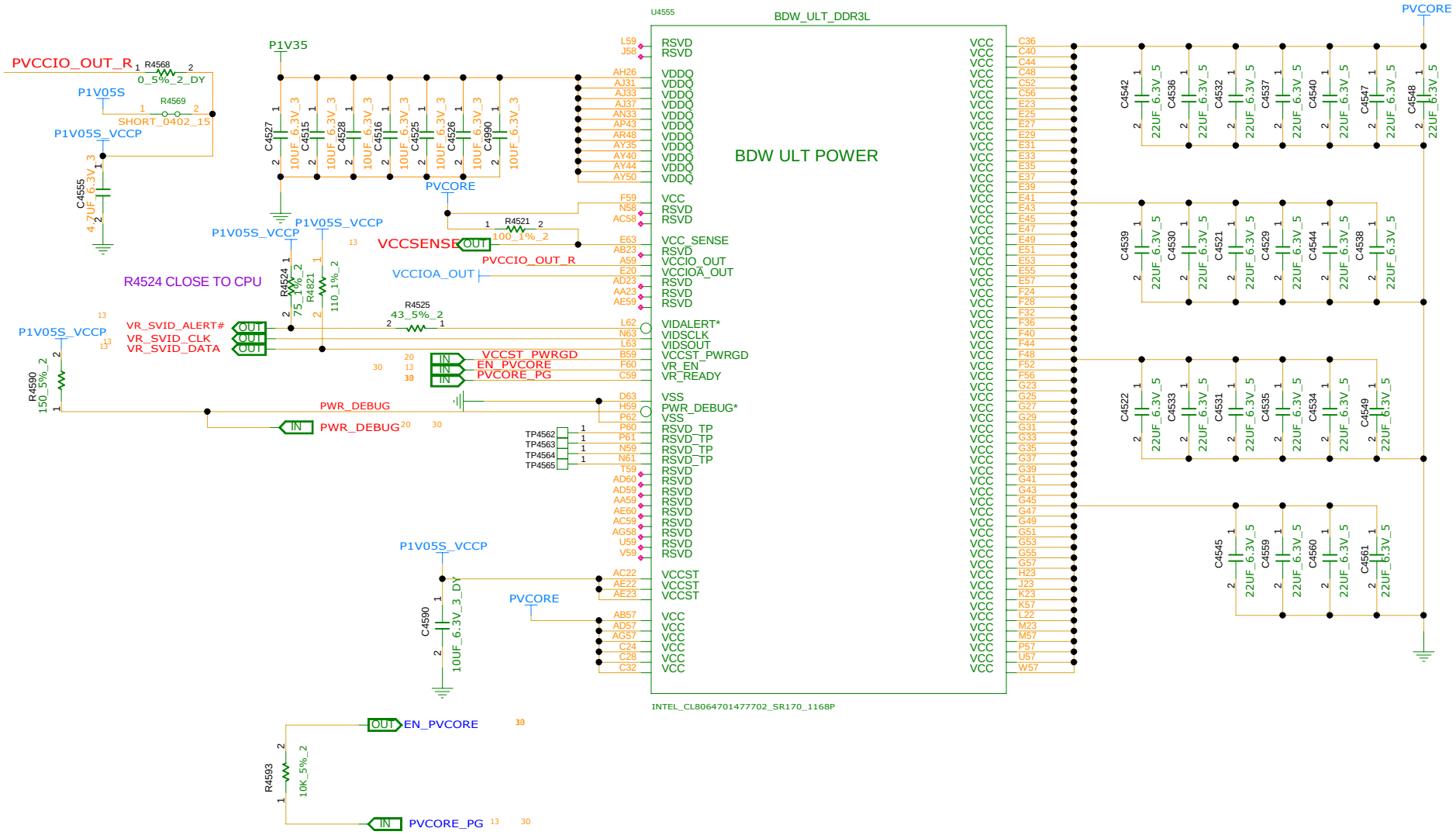

REFERENCE:4500~4949

INVENTEC

TITLE
MODEL,PROJECT,FUNCTION
MCP10-POWER

CHANGE by	PUMA_CHEN	DATE	4-NOV-2014
PCB P/N	6050A2635701	PCB VER	A02

SIZE	CODE	DOC.NUMBER	REV
A3	CS	1310A26357-0-0	X01

SHEET 30 of 64

WWW.ALISALER.COM

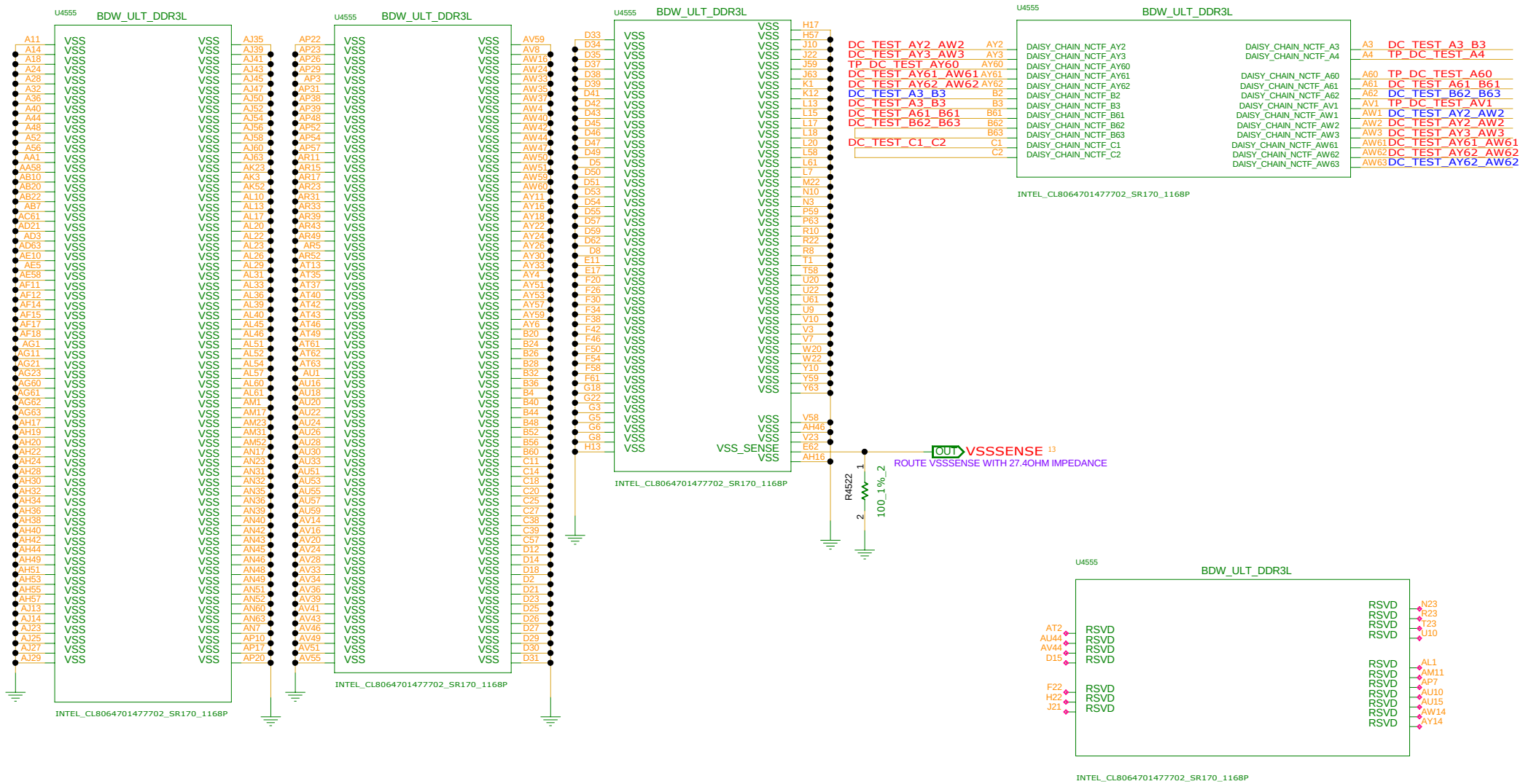

REFERENCE:4500~4949

CHANGE by	PUMA_CHEN	DATE	4-NOV-2014
PCB P/N	6050A2635701	PCB VER	A02

INVENTEC

TITLE: MODEL,PROJECT,FUNCTION
MCP11-GND,DAISY CHAIN,RESERVE

SIZE	CODE	DOC.NUMBER	REV
A3	CS	1310A26357-0-0	X01

SHEET 31 of 64

WWW.ALIFIXIT.COM

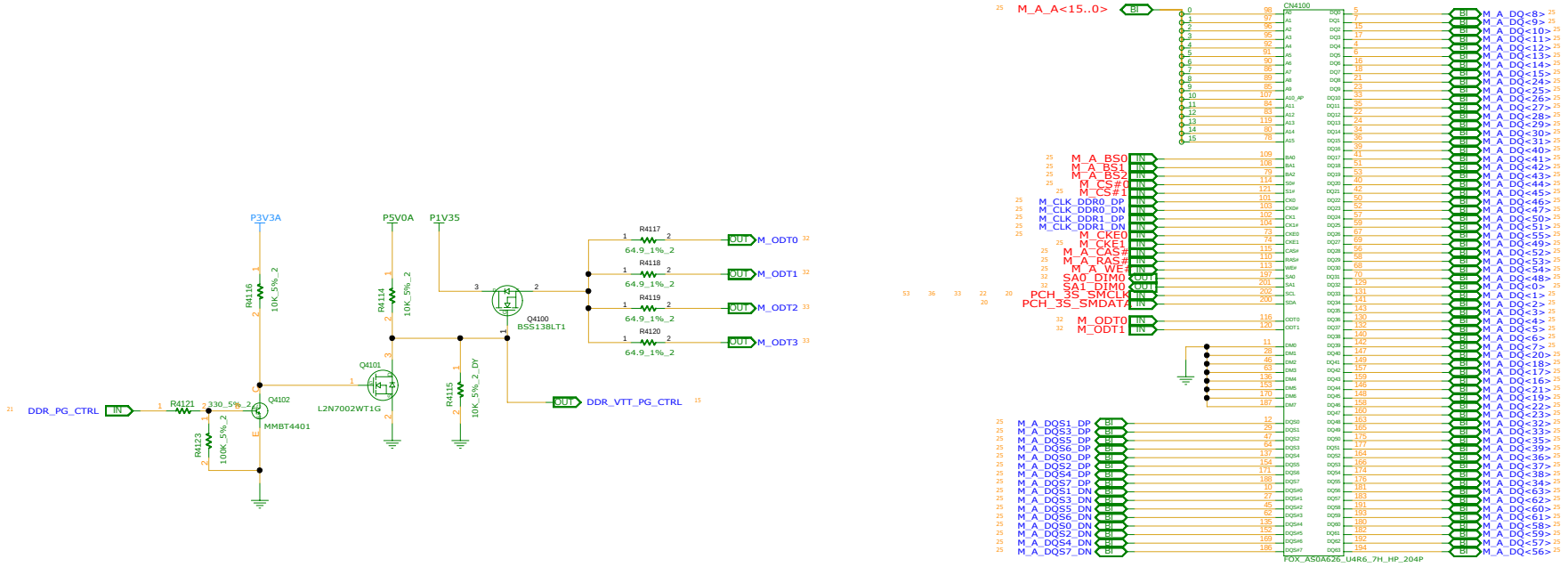

6026B0216701

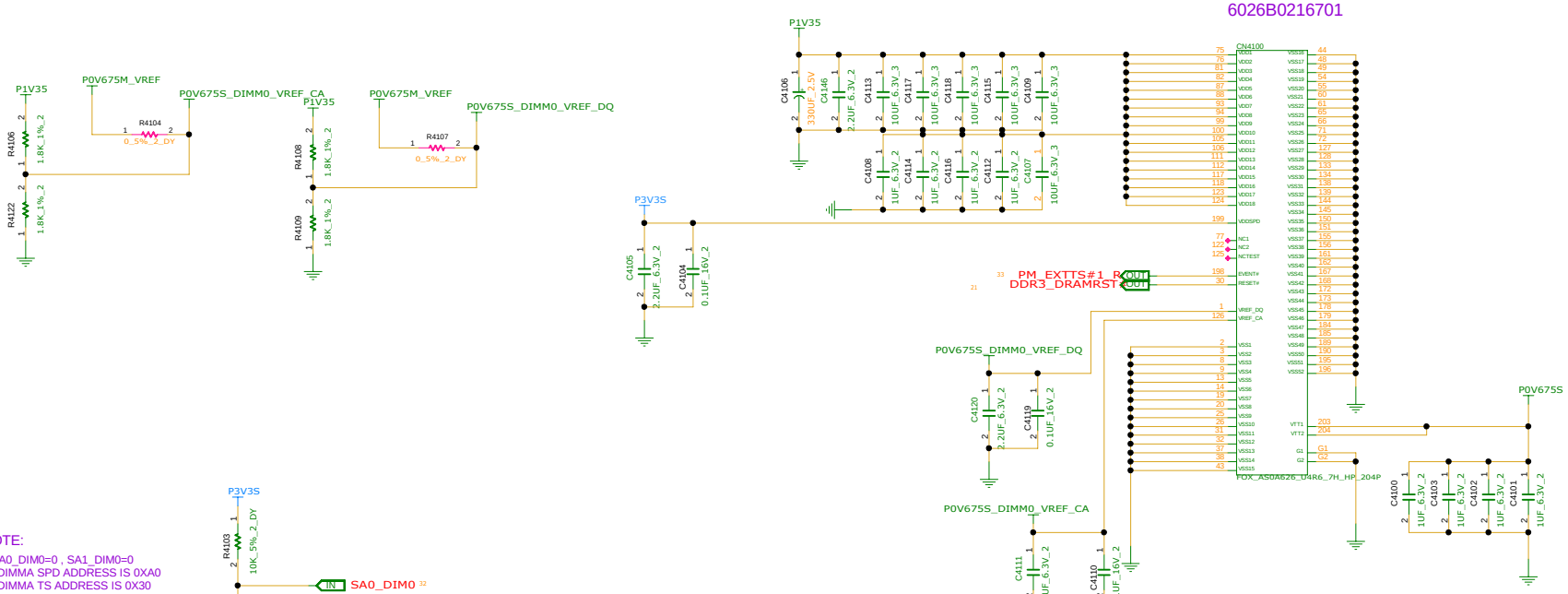

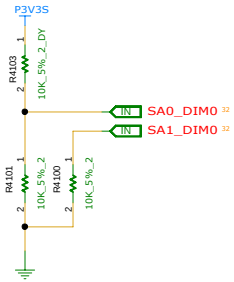

NOTE:

IF SA0_DIM0=0 , SA1_DIM0=0
SO-DIMMA SPD ADDRESS IS 0XA0
SO-DIMMA TS ADDRESS IS 0X30

IF SA0_DIM0=1 , SA1_DIM0=0
SO-DIMMA SPD ADDRESS IS 0XA2
SO-DIMMA TS ADDRESS IS 0X32

TITLE	MODEL,PROJECT,FUNCTION DDR3_SO-DIMM0		
SIZE C	CODE CS	DOC.NUMBER 1310A26357-0-0	REV X01
CHANGE by		DATE	
PCB P/N	60.10A06.357G01	PCB VER 4	2014
SHEET	of 32		64

WWW.ALISALER.COM

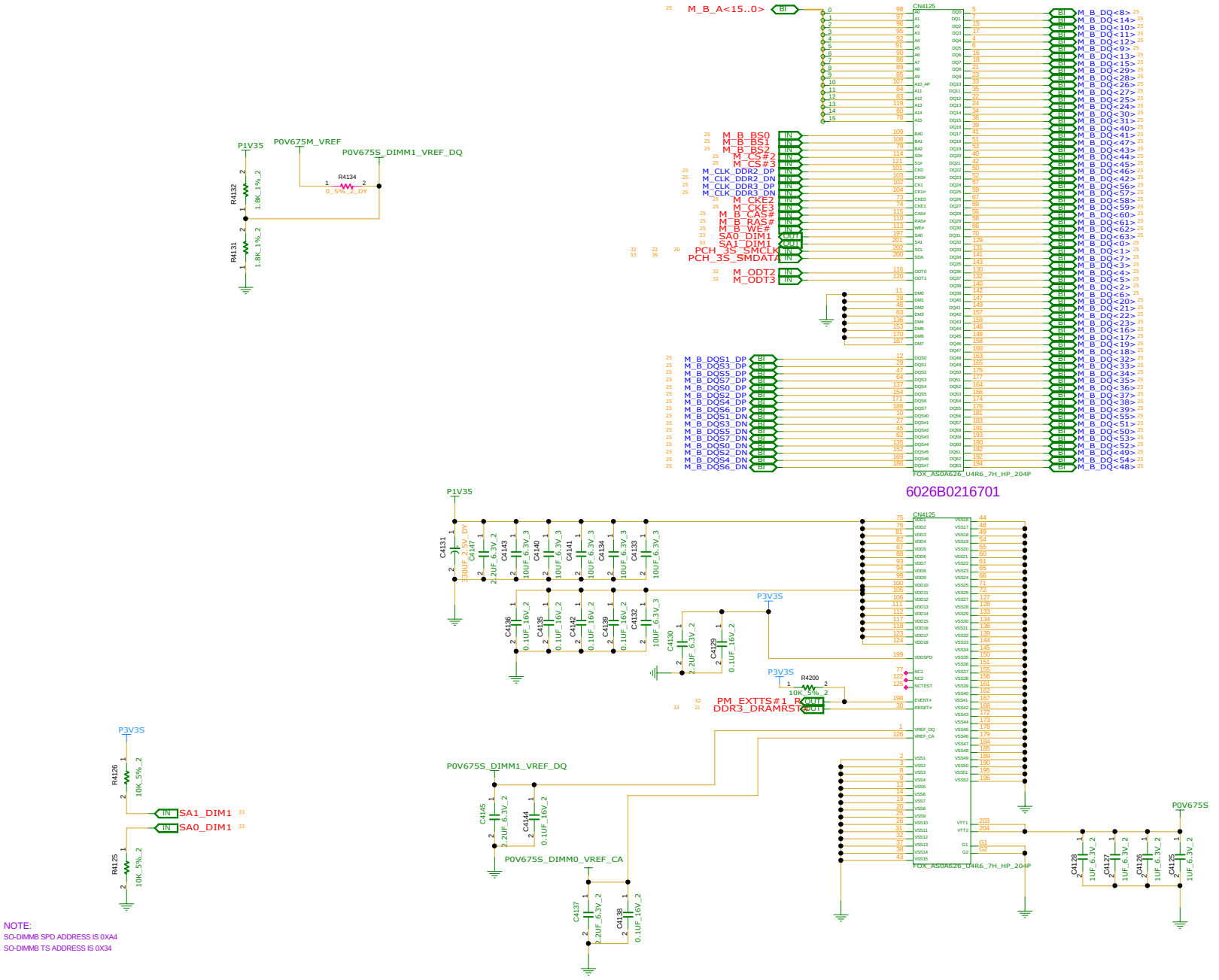

NOTE:
SO-DIMMB SPD ADDRESS IS 0XA4
SO-DIMMB TS ADDRESS IS 0X34

REFERENCE NUMBER:4100~4299

CHANGE to		DATE	
PCB P/N	6026B0216701	PCB VER	4.0

TITLE: MODEL,PROJECT,FUNCTION
DDR3_SO-DIMM0

SIZE	CODE	DOC.NUMBER	REV
C	CS	1310A26357-0-0	X01

SHEET 33 of 64

WWW.ALIFIXIT.COM

R5309 FOR CHIP OPERATIONG MODE
R5311,R5312 FOR PROGRAMMABLE INPUT EQUALIZATION LEVELS
R5313,R5314 FOR AUTO TEST ENABLE

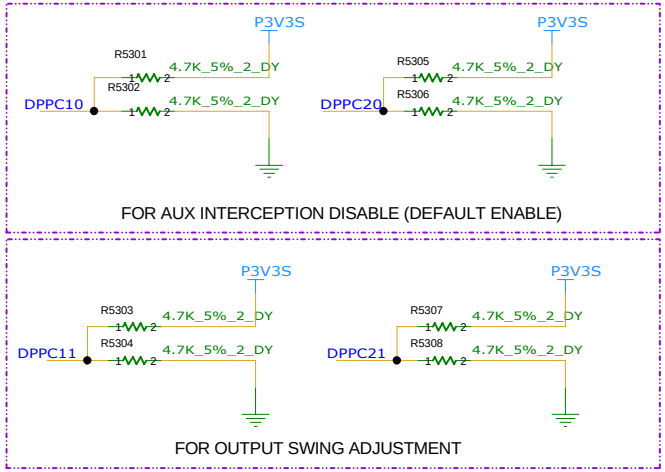

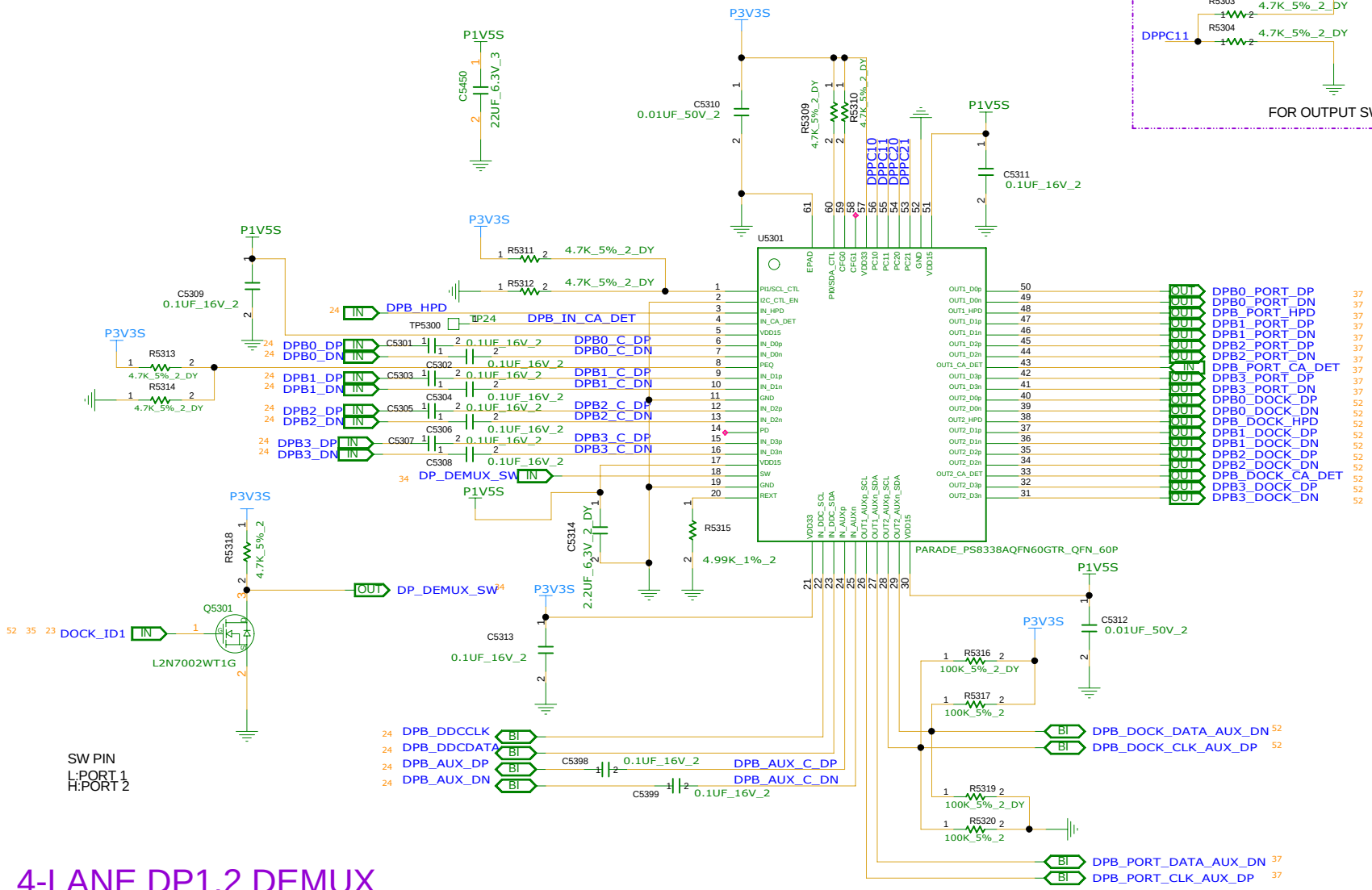

SW PIN
L:PORT 1
H:PORT 2

4-LANE DP1.2 DEMUX

INVENTEC

TITLE			
MODEL,PROJECT,FUNCTION DPB DEMUX1 TO DP			
SIZE A3	CODE CS	DOC.NUMBER 1310A26357-0-0	REV X01
SHEET 34 of 64			

CHANGE by	PUMA_CHEN	DATE	4-NOV-2014
PCB P/N	6050A2635701	PCB VER	A02

WWW.ALISALER.COM

R5409 FOR CHIP OPERATIONG MODE
R5411,R5412 FOR PROGRAMMABLE INPUT EQUALIZATION LEVELS
R5413,R5414 FOR AUTO TEST ENABLE

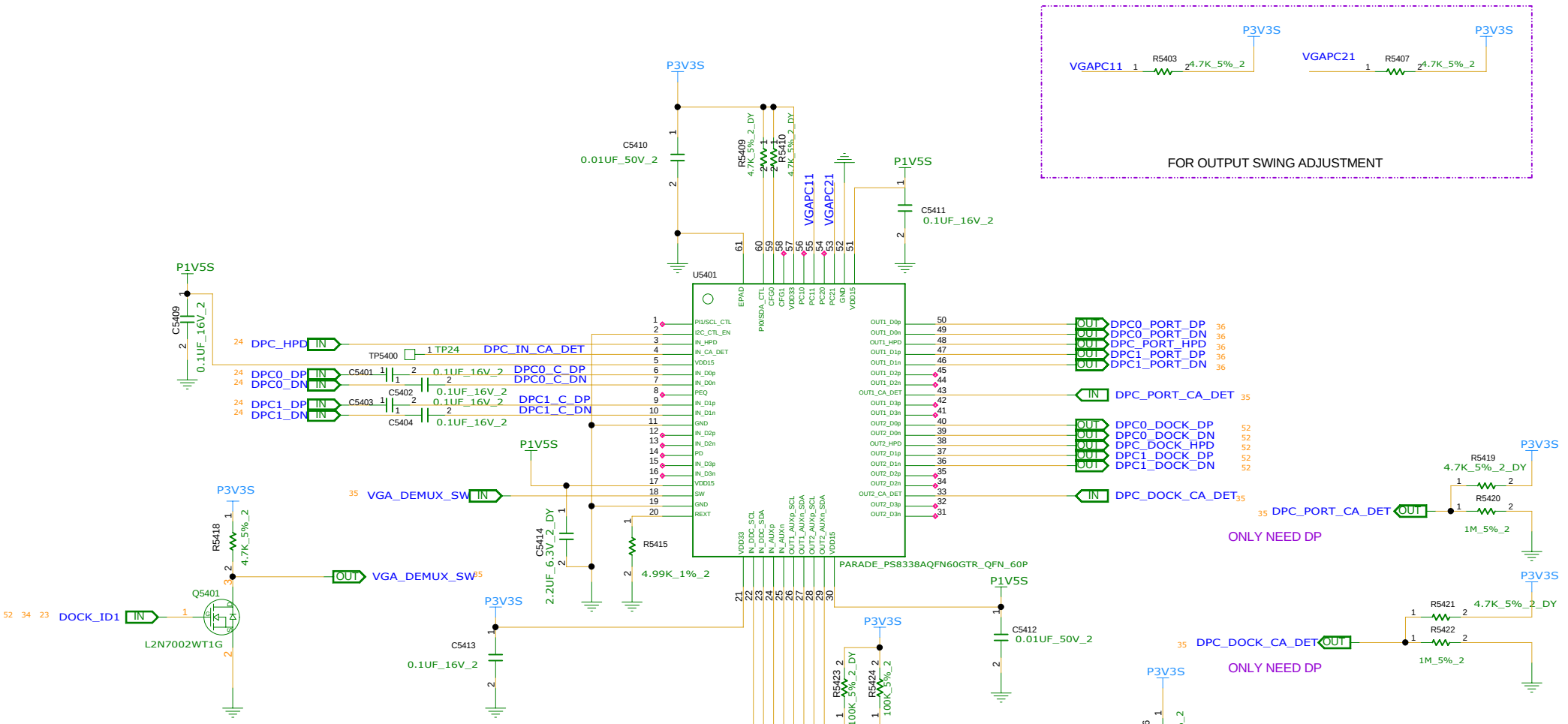

SW PIN
L:PORT 1
H:PORT 2

2-LANE DP1.2 DEMUX

INVENTEC

TITLE
MODEL,PROJECT,FUNCTION
DPC DEMUX2 TO VGA

SIZE	CODE	DOC.NUMBER	REV
A3	CS	1310A26357-0-0	X01

SHEET 35 of 64

CHANGE by	PUMA CHEN	DATE	4-NOV-2014
PCB P/N	6050A2635701	PCB VER	A02

WWW.ALIFIXIT.COM

	3393	3355
PIN 2	R3062 C3069 C3070	R3061
PIN 5	R3065	R3063 C3077
PIN 8		C3061 C3062
PIN 11	C3073	
PIN 14	R3064 C3074	R3080
PIN 15		R3078
PIN 16		R3067
PIN 17		R3079
PIN 28	L3066 C3087	
PIN 35	C3068	R3081
PIN 36	R3077	
PIN 37	R3074	R3076
PIN 38	10K_DY	R3075 C3090 C3091
PIN 39		L3068 C3092
PIN 40		R3092

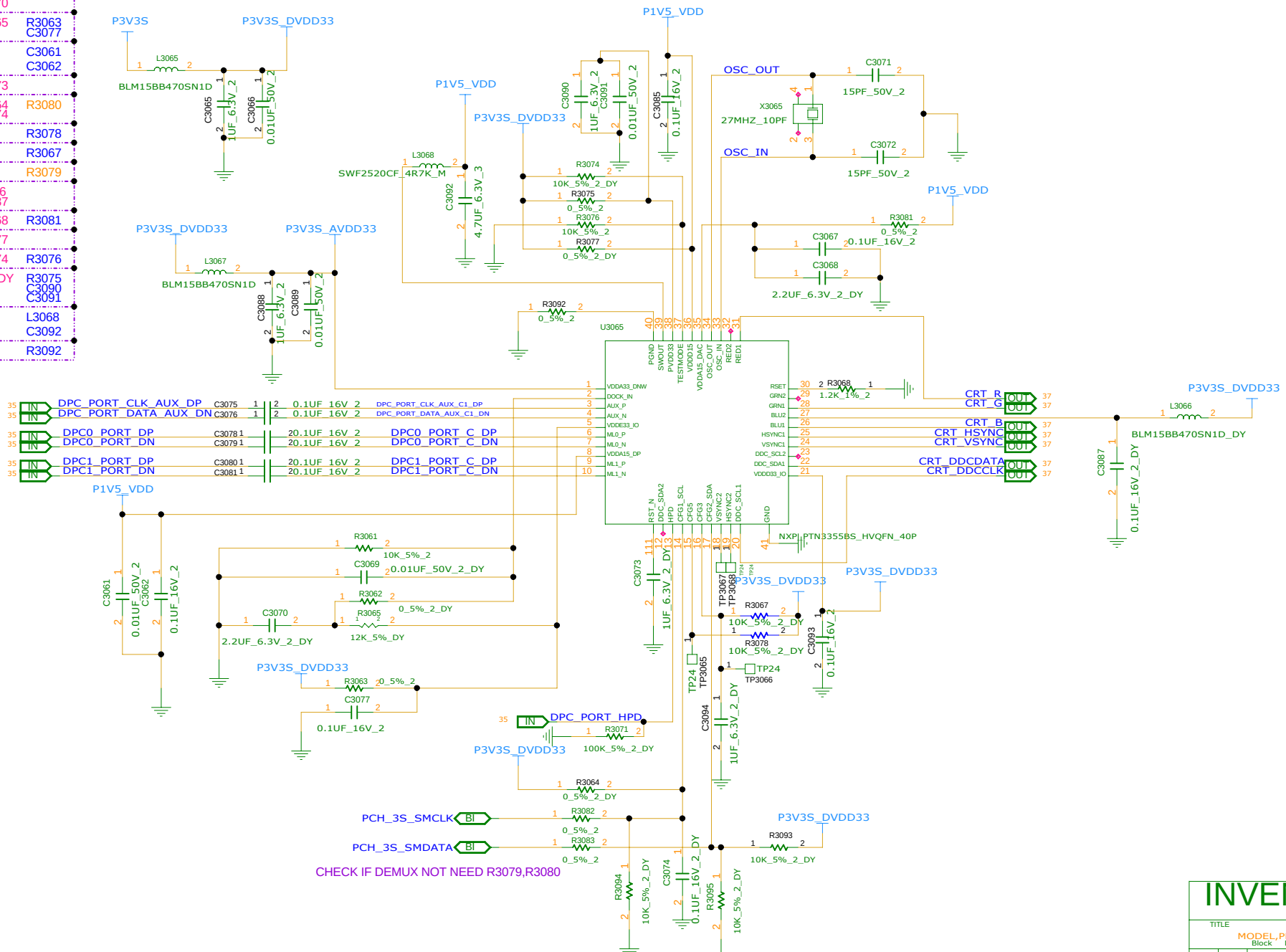

INVENTEC

TITLE: MODEL,PROJECT,FUNCTION
Block Diagram

CHANGE by	PUMA_CHEN	DATE	4-NOV-2014
PCB P/N	6050A2635701	PCB VER	A02

SIZE	CODE	DOC.NUMBER	REV
A3	CS	1310A26357-0-0	X01

SHEET 36 of 64

WWW.ALISALER.COM

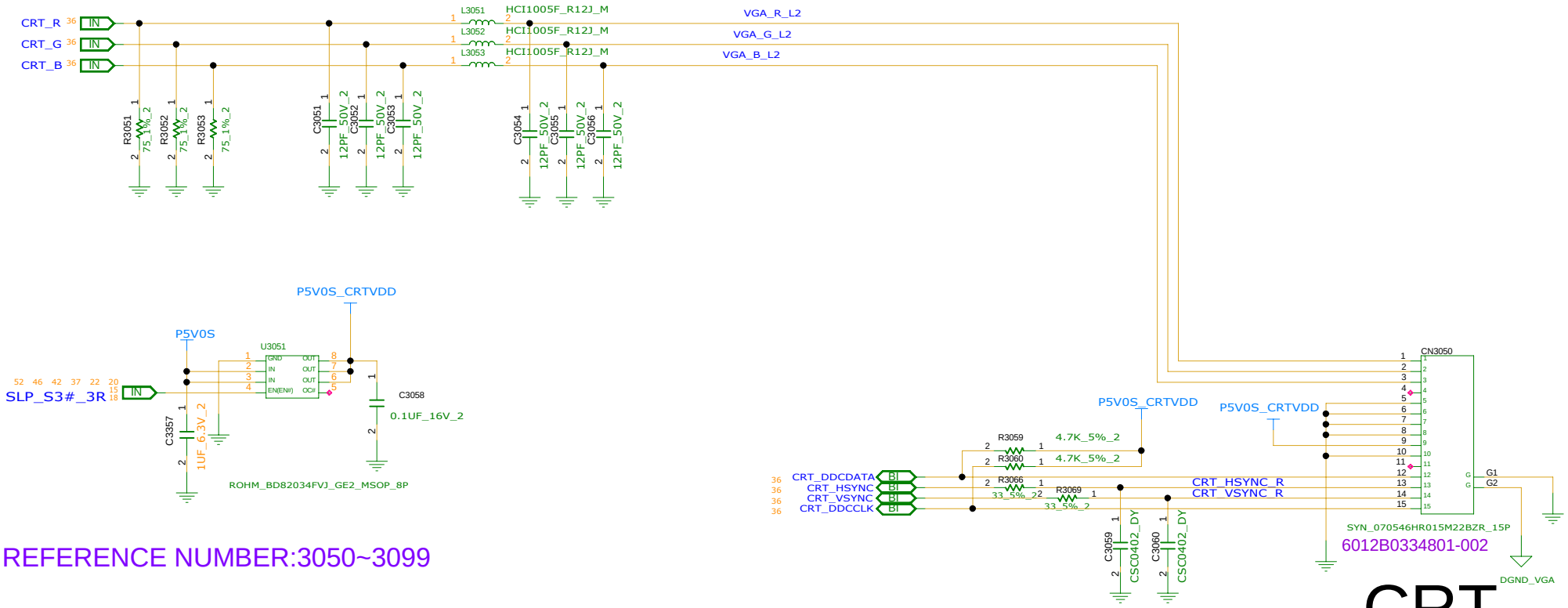

REFERENCE NUMBER:3050~3099

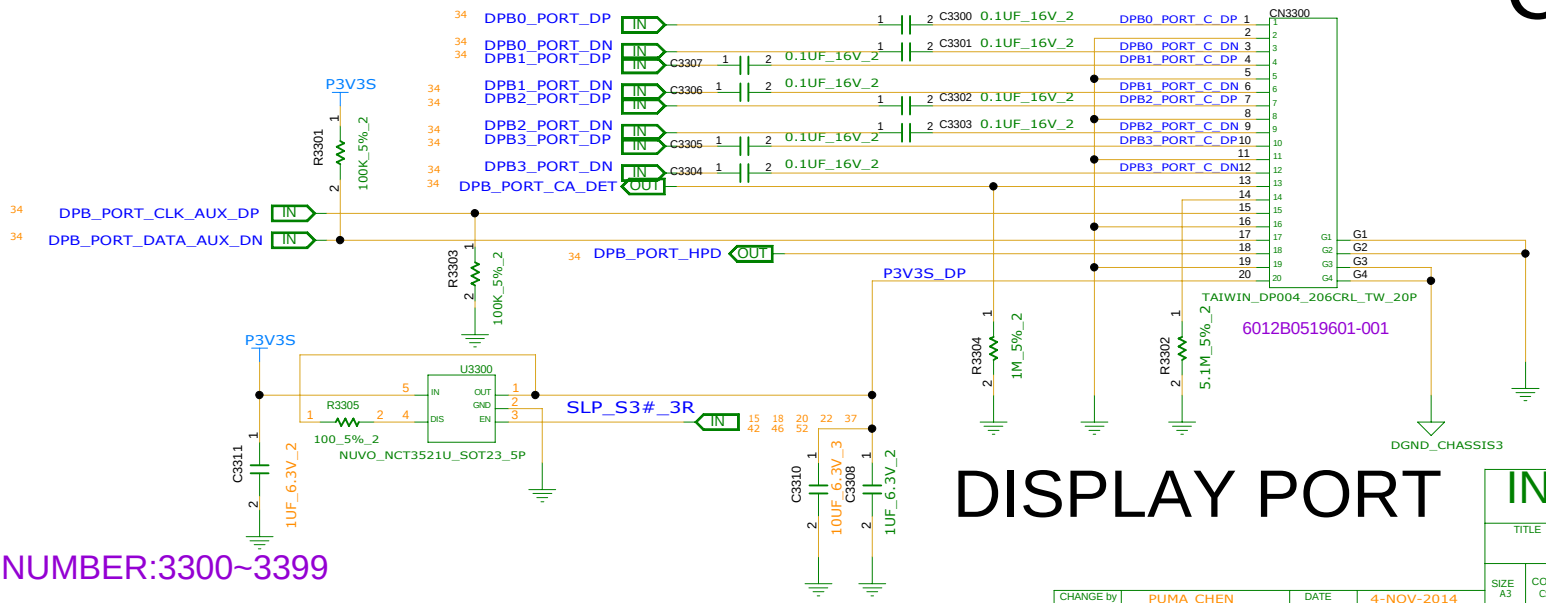

REFERENCE NUMBER:3300~3399

INVENTEC

TITLE	MODEL,PROJECT,FUNCTION CRT & DP		
SIZE A3	CODE CS	DOC.NUMBER 1310A26357-0-0	REV X01
SHEET 37 of 64			
CHANGE by	PUMA_CHEN	DATE	4-NOV-2014
PCB P/N	6050A2635701	PCB VER	A02

WWW.ALIFIXIT.COM

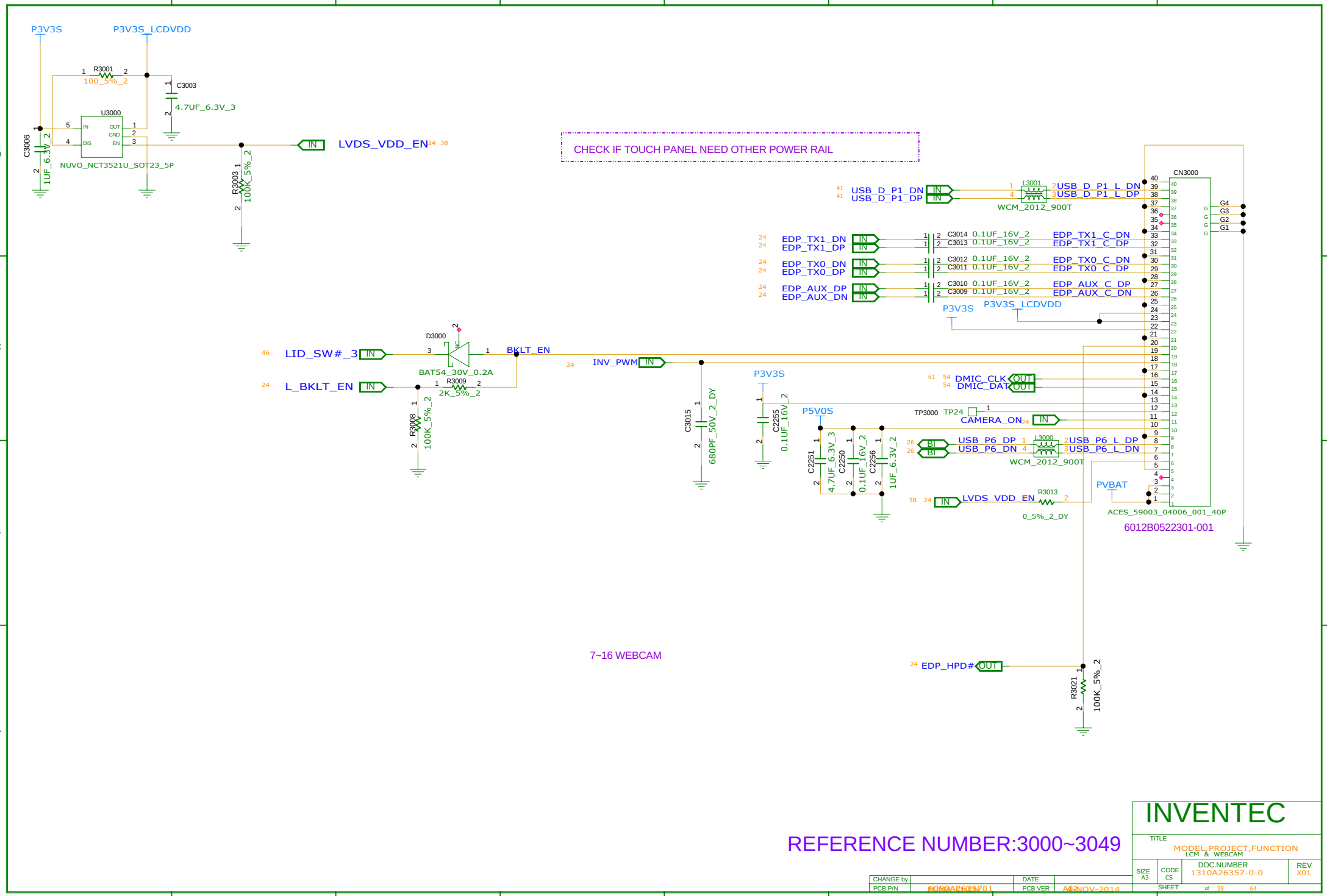

REFERENCE NUMBER:3000~3049

INVENTEC

TITLE			
MODEL,PROJECT,FUNCTION LCM & WEBCAM			
SIZE A3	CODE CS	DOC.NUMBER 1310A26357-0-0	REV X01
SHEET	of 38	64	

CHANGE by		DATE	
PCB P/N	60.0A26.001	PCB VER	A02

WWW.ALISALER.COM

RESERVED

INVENTEC

TITLE
MODEL,PROJECT,FUNCTION
RESERVE

SIZE	CODE	DOC.NUMBER	REV
C	CS	1310A2637-0-0	X01

SHEET 39 of 64

CHANGE to		DATE	
PCB P/N	60.[illegible]	PCB VER	4.0

WWW.ALIFIXIT.COM

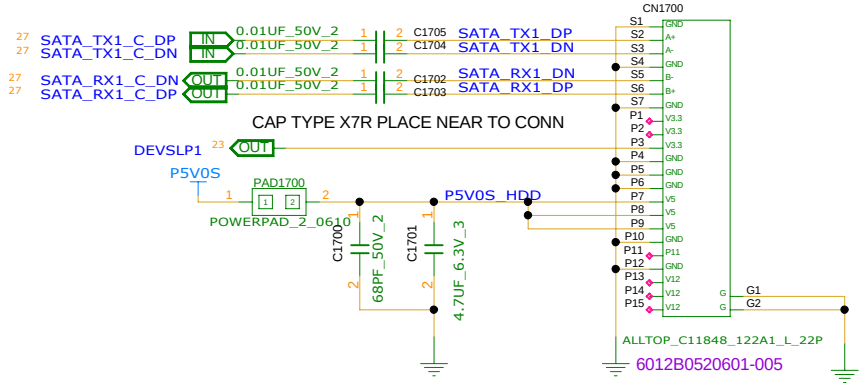

REFERENCE NUMBER:1700~1749

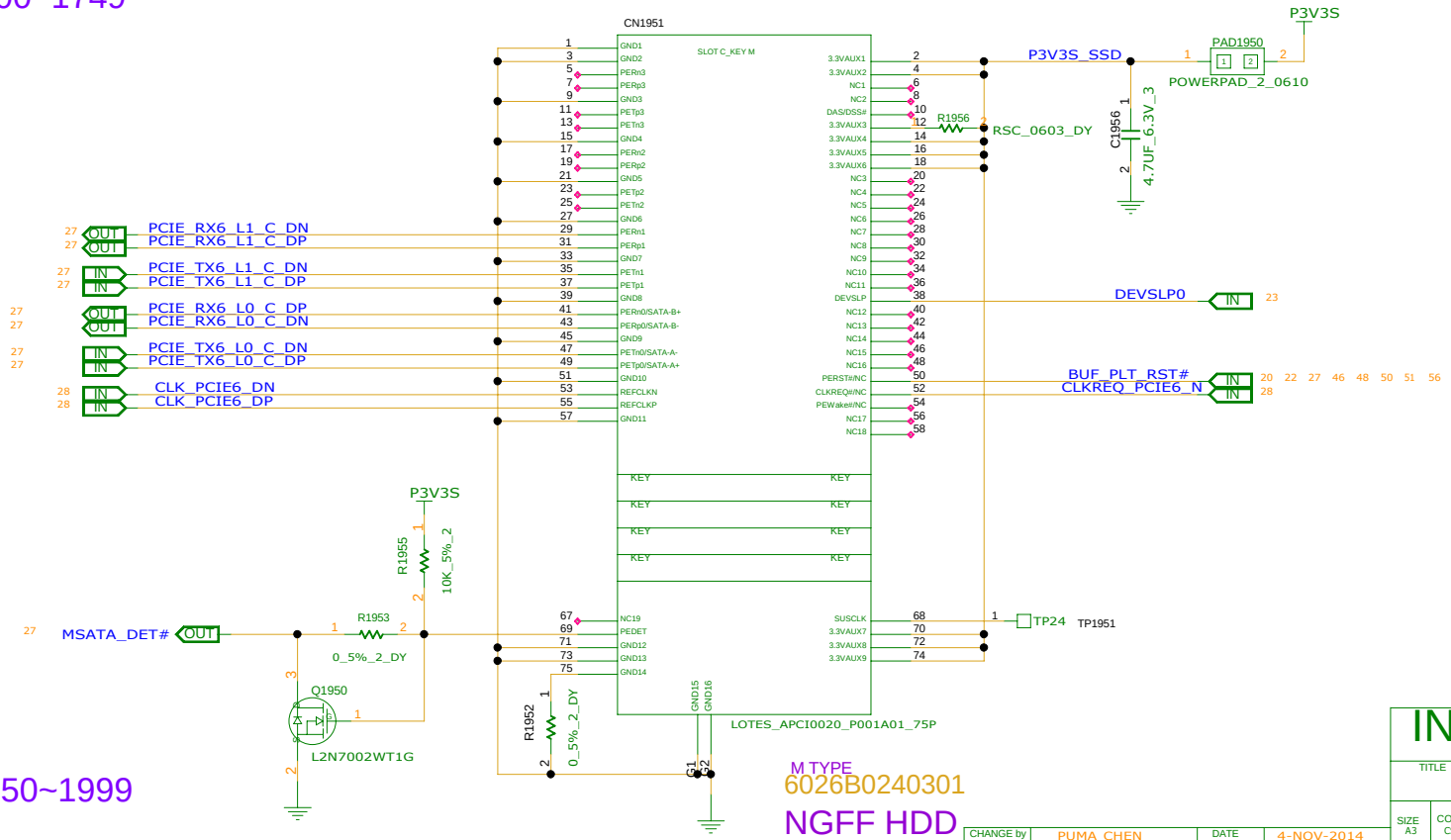

REFERENCE NUMBER:1950~1999

CHANGE by	PUMA_CHEN	DATE	4-NOV-2014
PCB P/N	6050A2635701	PCB VER	A02

INVENTEC

TITLE: MODEL,PROJECT,FUNCTION
SATA HDD & M-SATA CONN.

SIZE	CODE	DOC.NUMBER	REV
A3	CS	1310A26357-0-0	X01

SHEET 40 of 64

WWW.ALISALER.COM

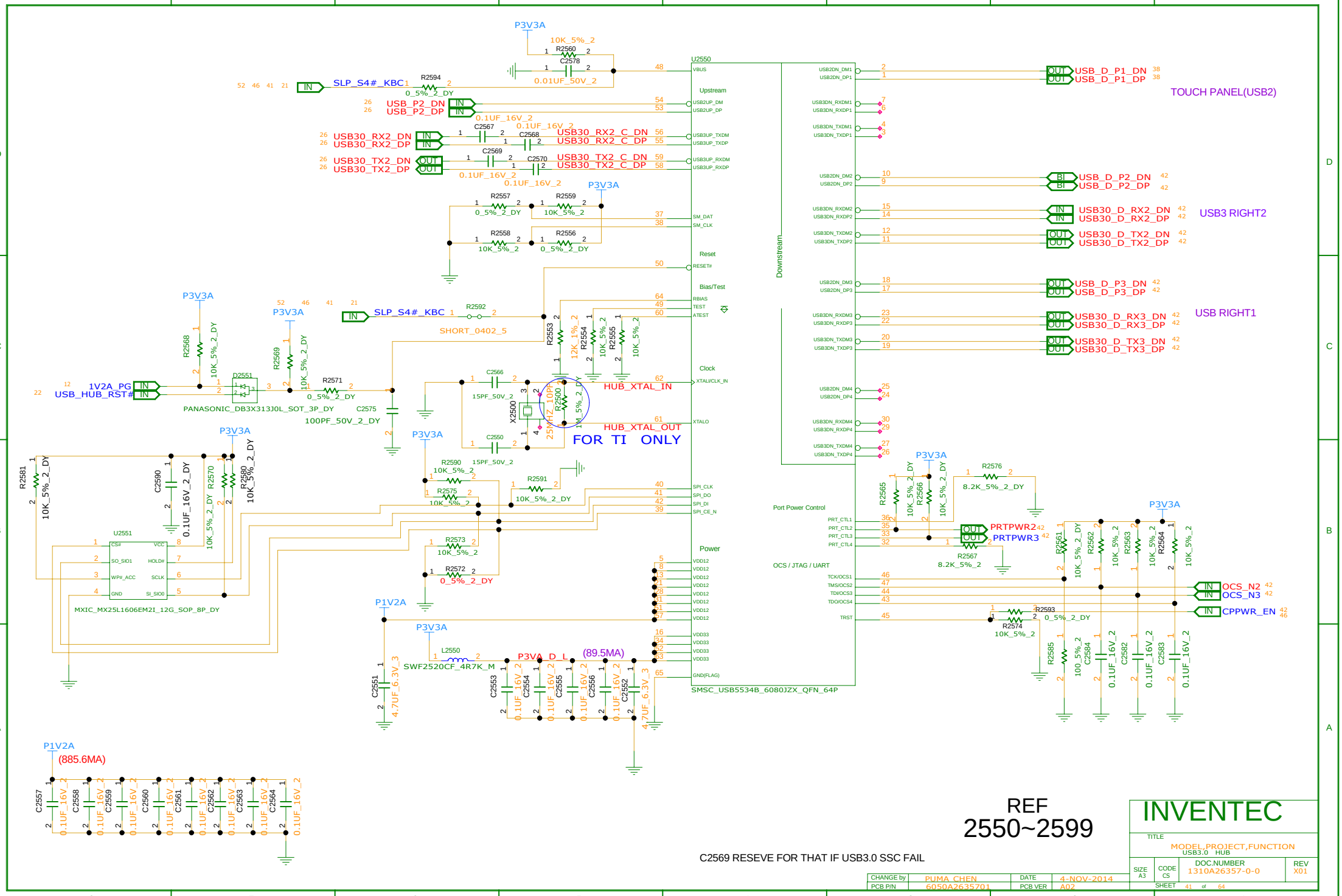
U2550
SMSC_USB5534B_6080JZX_QFN_64P
Upstream
Downstream
Reset
Bias/Test
Clock
Power
Port Power Control
OCS / JTAG / UART
TOUCH PANEL(USB2)
USB3 RIGHT2
USB RIGHT1
USB_D_P1_DN
USB_D_P1_DP
USB_D_P2_DN
USB_D_P2_DP
USB30_D_RX2_DN
USB30_D_RX2_DP
USB30_D_TX2_DN
USB30_D_TX2_DP
USB_D_P3_DN
USB_D_P3_DP
USB30_D_RX3_DN
USB30_D_RX3_DP
USB30_D_TX3_DN
USB30_D_TX3_DP
USB_P2_DN
USB_P2_DP
USB30_RX2_DN
USB30_RX2_DP
USB30_TX2_DN
USB30_TX2_DP
USB30_RX2_C_DN
USB30_RX2_C_DP
USB30_TX2_C_DN
USB30_TX2_C_DP
SLP_S4#_KBC
1V2A_PG
USB_HUB_RST#
HUB_XTAL_IN
HUB_XTAL_OUT
FOR TI ONLY
PRTPWR2
PRTPWR3
OCS_N2
OCS_N3
CPPWR_EN
P3V3A
P1V2A
P3VA_D_L
(89.5MA)
(885.6MA)
PANASONIC_DB3X313J0L_SOT_3P_DY
MXIC_MX25L1606EM2I_12G_SOP_8P_DY
SWF2520CF_4R7K_M
SHORT_0402_5
C2569 RESEVE FOR THAT IF USB3.0 SSC FAIL
REF
2550~2599
INVENTEC
MODEL,PROJECT,FUNCTION
USB3.0 HUB
DOC.NUMBER
1310A26357-0-0
REV
X01
SIZE
A3
CODE
CS
SHEET 41 of 64
CHANGE by
PUMA_CHEN
DATE
4-NOV-2014
PCB P/N
6050A2635701
PCB VER
A02

WWW.ALIFIXIT.COM

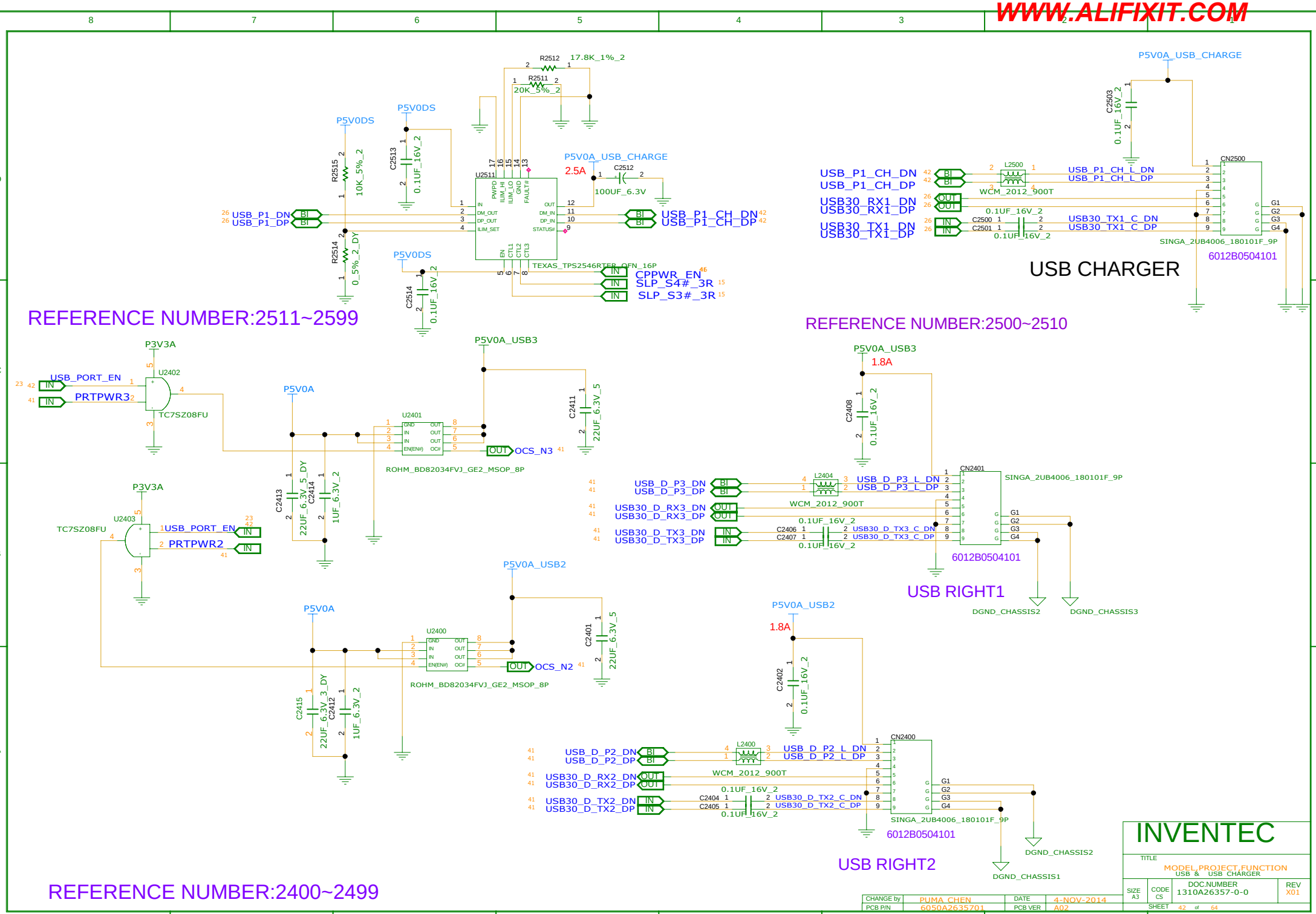

WWW.ALISALER.COM

RESERVED

REFERENCE NUMBER:2400~2499

CHANGE by	PUMA_CHEN	DATE	4-NOV-2014
PCB P/N	6050A2635701	PCB VER	A02

INVENTEC

TITLE
MODEL,PROJECT,FUNCTION
USB CONN.

SIZE	CODE	DOC.NUMBER	REV
A3	CS	1310A26357-0-0	X01

SHEET 43 of 64

WWW.ALIFIXIT.COM

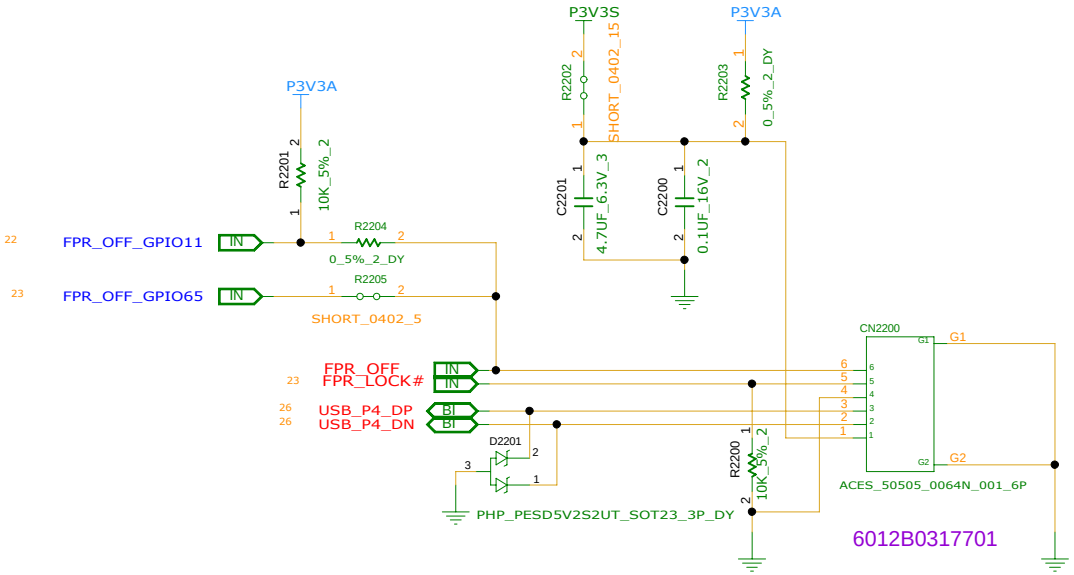

FINGER PRINT CONN

REFERENCE:4350~4399

CHANGE by	PUMA_CHEN	DATE	4-NOV-2014
PCB P/N	6050A2635701	PCB VER	A02

INVENTEC

TITLE
MODEL,PROJECT,FUNCTION
FINGER PRINTER & NFC

SIZE	CODE	DOC.NUMBER	REV
A3	CS	1310A26357-0-0	X01

SHEET 44 of 64

WWW.ALISALER.COM

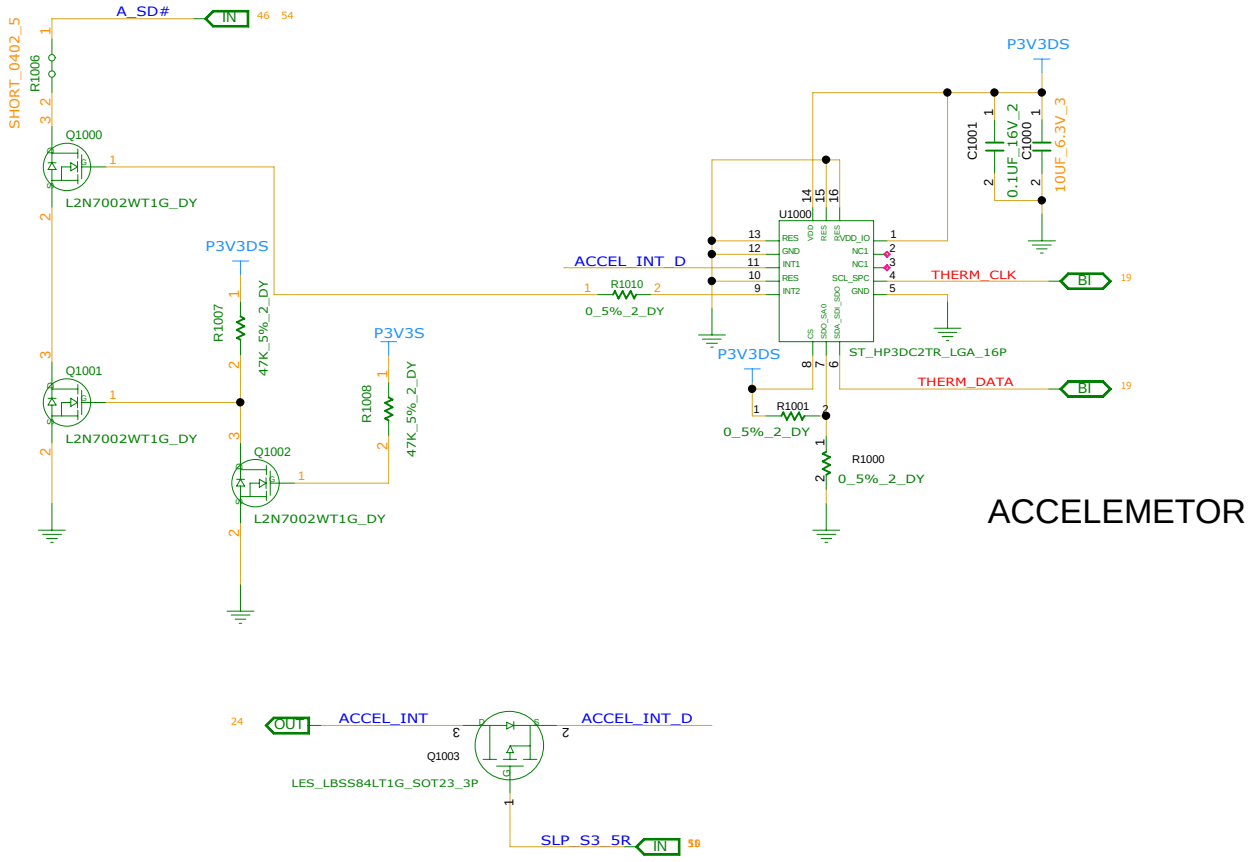

REFERENCE NUMER : 1000~1099

CHANGE by	PUMA_CHEN	DATE	4-NOV-2014
PCB P/N	6050A2635701	PCB VER	A02

INVENTEC

TITLE: MODEL,PROJECT,FUNCTION
ACCELEMETOR

SIZE	CODE	DOC.NUMBER	REV
A3	CS	1310A26357-0-0	X01

SHEET 45 of 64

WWW.ALIFIXIT.COM

REFERENCE NUMER : 300~399

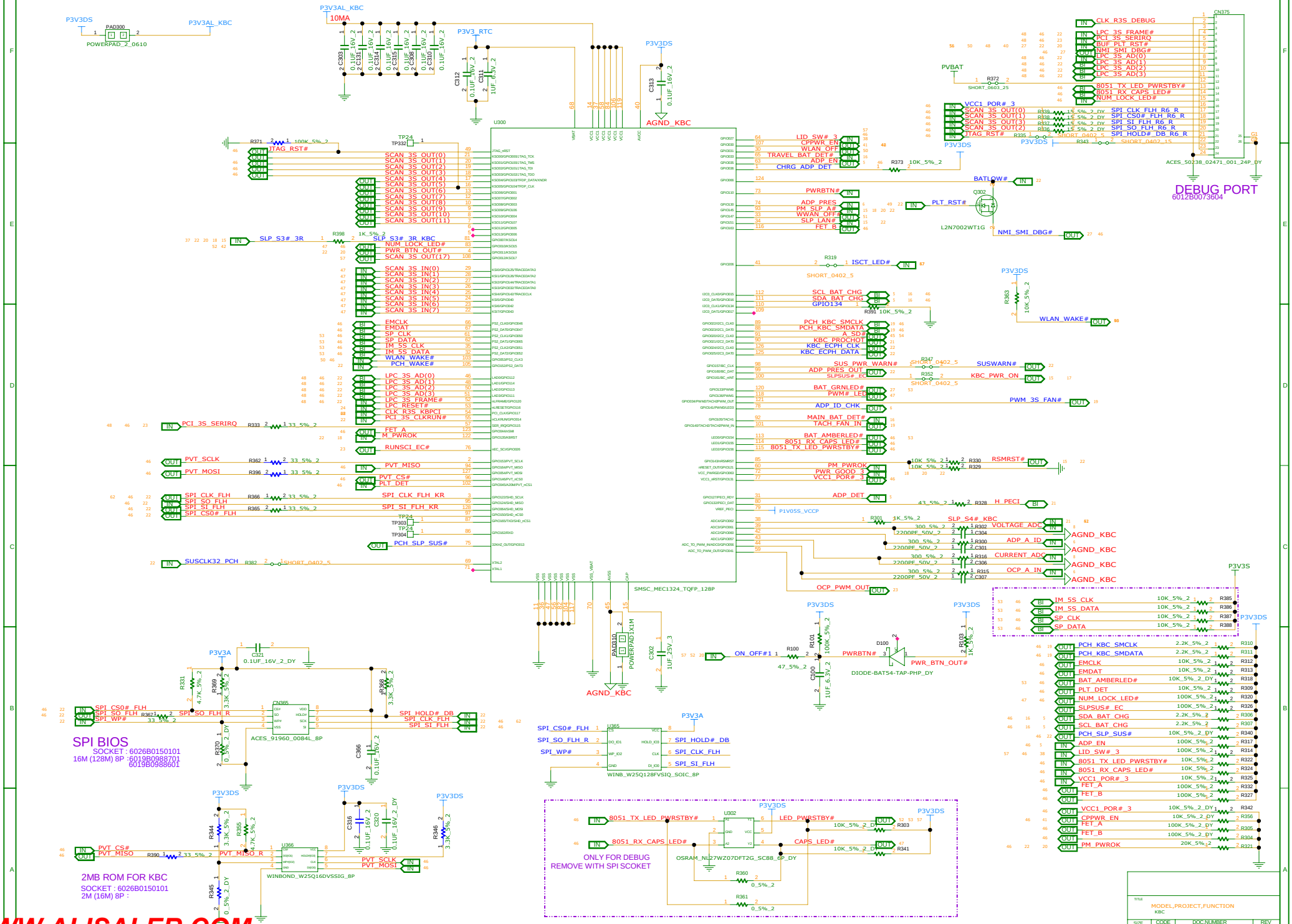

WWW.ALISALER.COM

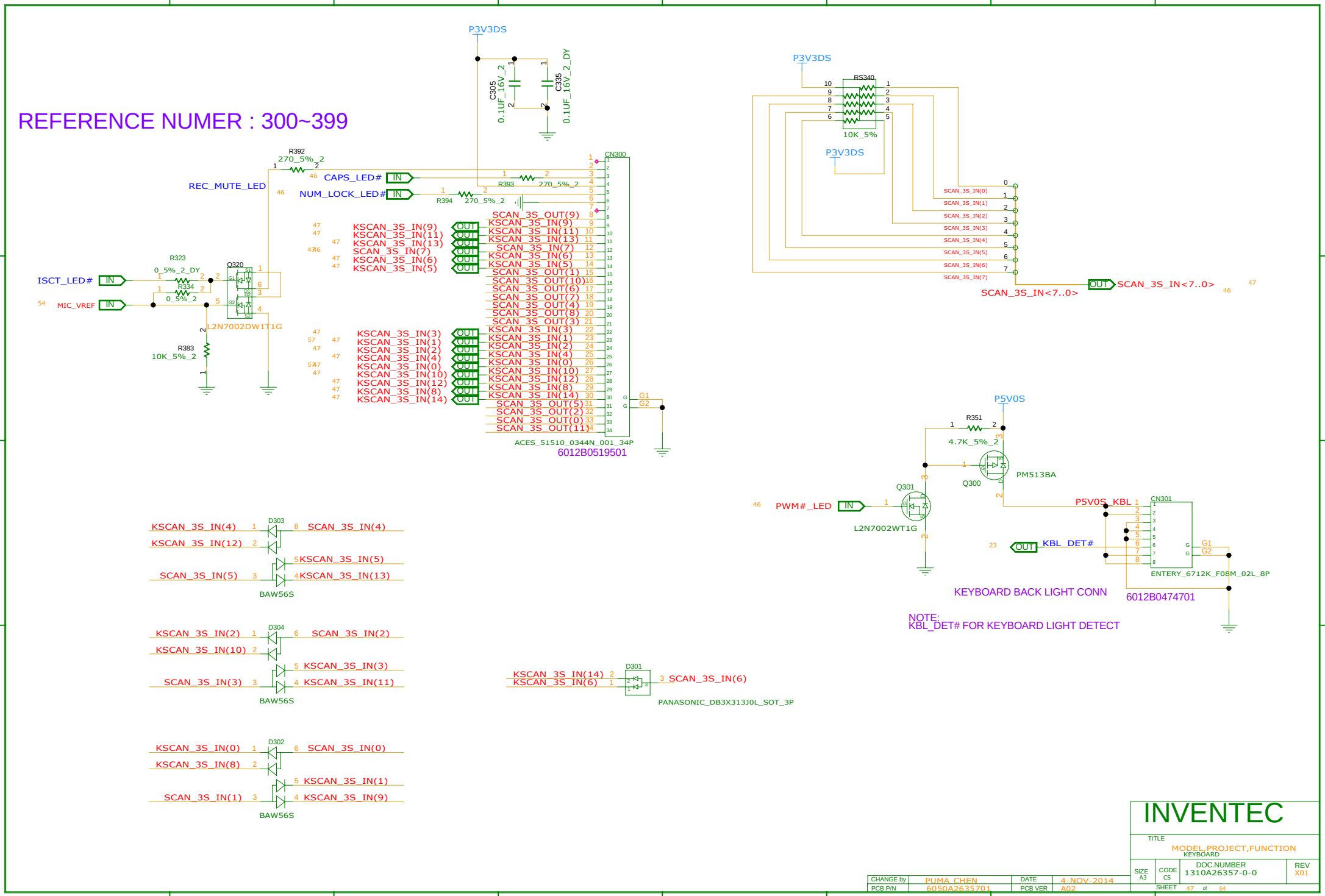
REFERENCE NUMER : 300~399
P3V3DS
C305 0.1UF_16V_2
C335 0.1UF_16V_2_DY
R392 270_5%_2
REC_MUTE_LED
CAPS_LED# IN
NUM_LOCK_LED# IN
R393 270_5%_2
R394 270_5%_2
CN300
SCAN_3S_OUT(9)
KSCAN_3S_IN(9)
KSCAN_3S_IN(11)
KSCAN_3S_IN(13)
SCAN_3S_IN(7)
KSCAN_3S_IN(6)
KSCAN_3S_IN(5)
SCAN_3S_OUT(1)
SCAN_3S_OUT(10)
SCAN_3S_OUT(6)
SCAN_3S_OUT(7)
SCAN_3S_OUT(4)
SCAN_3S_OUT(8)
SCAN_3S_OUT(3)
KSCAN_3S_IN(3)
KSCAN_3S_IN(1)
KSCAN_3S_IN(2)
KSCAN_3S_IN(4)
KSCAN_3S_IN(0)
KSCAN_3S_IN(10)
KSCAN_3S_IN(12)
KSCAN_3S_IN(8)
KSCAN_3S_IN(14)
SCAN_3S_OUT(5)
SCAN_3S_OUT(2)
SCAN_3S_OUT(0)
SCAN_3S_OUT(11)
G1
G2
ACES_51510_0344N_001_34P
6012B0519501
ISCT_LED# IN
MIC_VREF IN
R323 0_5%_2_DY
R334 0_5%_2
Q320
L2N7002DW1T1G
R383 10K_5%_2
P3V3DS
RS340
10K_5%
P3V3DS
SCAN_3S_IN(0)
SCAN_3S_IN(1)
SCAN_3S_IN(2)
SCAN_3S_IN(3)
SCAN_3S_IN(4)
SCAN_3S_IN(5)
SCAN_3S_IN(6)
SCAN_3S_IN(7)
OUT SCAN_3S_IN<7..0>
SCAN_3S_IN<7..0>
P5V0S
R351 4.7K_5%_2
Q300 PM513BA
Q301 L2N7002WT1G
PWM#_LED IN
P5V0S_KBL
CN301
OUT KBL_DET#
ENTERY_6712K_F08M_02L_8P
6012B0474701
KEYBOARD BACK LIGHT CONN
NOTE:
KBL_DET# FOR KEYBOARD LIGHT DETECT
KSCAN_3S_IN(4)
KSCAN_3S_IN(12)
SCAN_3S_IN(5)
D303
SCAN_3S_IN(4)
KSCAN_3S_IN(5)
KSCAN_3S_IN(13)
BAW56S
KSCAN_3S_IN(2)
KSCAN_3S_IN(10)
SCAN_3S_IN(3)
D304
SCAN_3S_IN(2)
KSCAN_3S_IN(3)
KSCAN_3S_IN(11)
BAW56S
KSCAN_3S_IN(0)
KSCAN_3S_IN(8)
SCAN_3S_IN(1)
D302
SCAN_3S_IN(0)
KSCAN_3S_IN(1)
KSCAN_3S_IN(9)
BAW56S
KSCAN_3S_IN(14)
KSCAN_3S_IN(6)
D301
SCAN_3S_IN(6)
PANASONIC_DB3X313J0L_SOT_3P
INVENTEC
TITLE
MODEL,PROJECT,FUNCTION
KEYBOARD
SIZE A3
CODE CS
DOC.NUMBER 1310A26357-0-0
REV X01
SHEET 47 of 64
CHANGE by PUMA_CHEN
DATE 4-NOV-2014
PCB P/N 6050A2635701
PCB VER A02

WWW.ALIFIXIT.COM

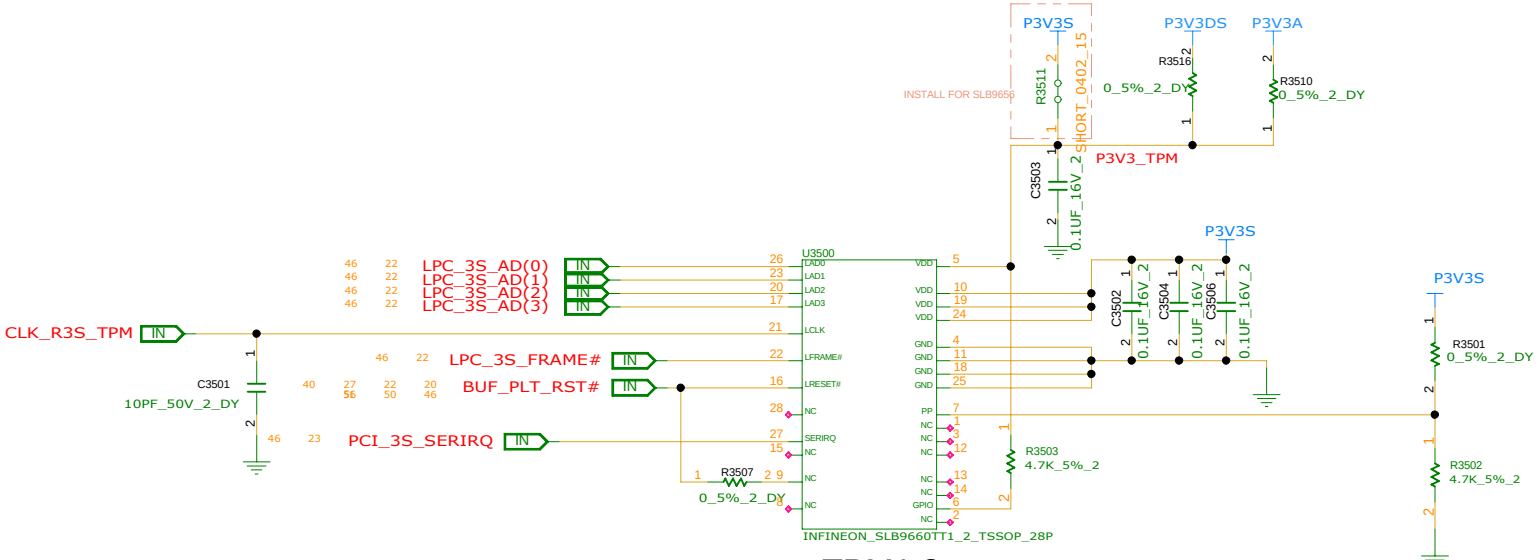

TPM1.2

	SLB9656TT1.2	SLB9660TT1.2
R3507	INSTALL	OPEN

REFERENCE NUMER : 3500~3549

INVENTEC

TITLE: MODEL,PROJECT,FUNCTION
TPM

CHANGE by	PUMA_CHEN	DATE	4-NOV-2014
PCB P/N	6050A2635701	PCB VER	A02

SIZE	CODE	DOC.NUMBER	REV
A3	CS	1310A26357-0-0	X01

SHEET 48 of 64

WWW.ALISALER.COM

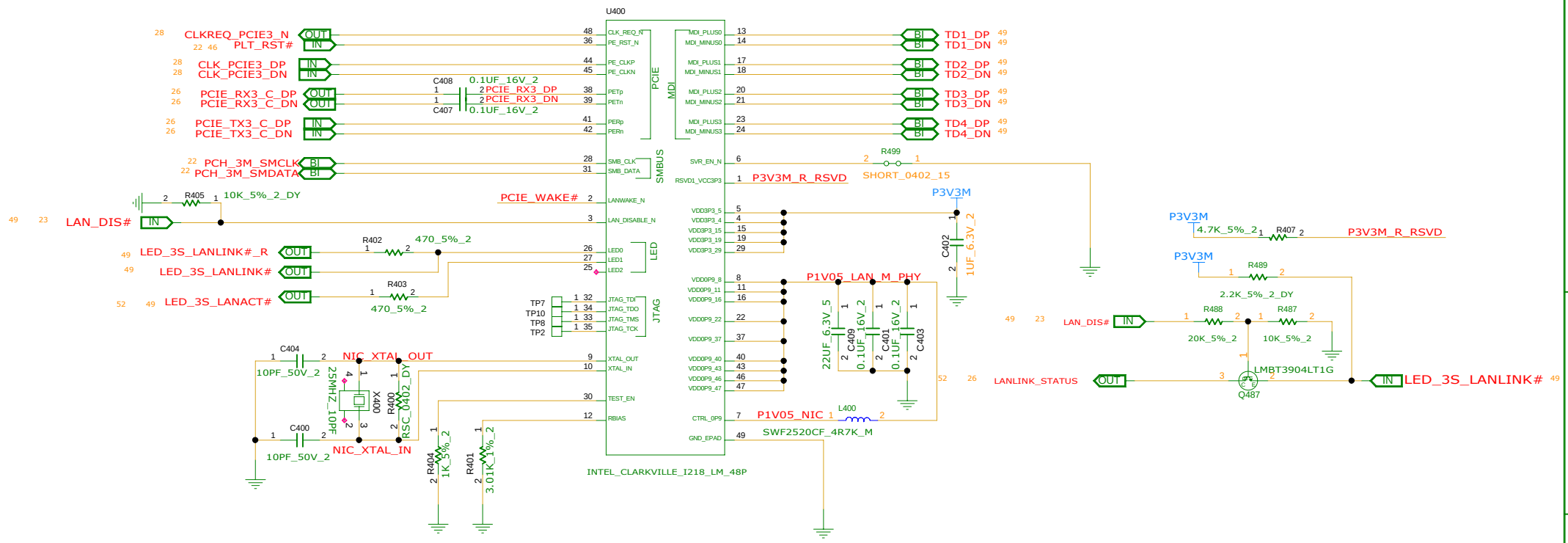

REFERENCE NUMER : 400~469

REFERENCE NUMER : 470~499

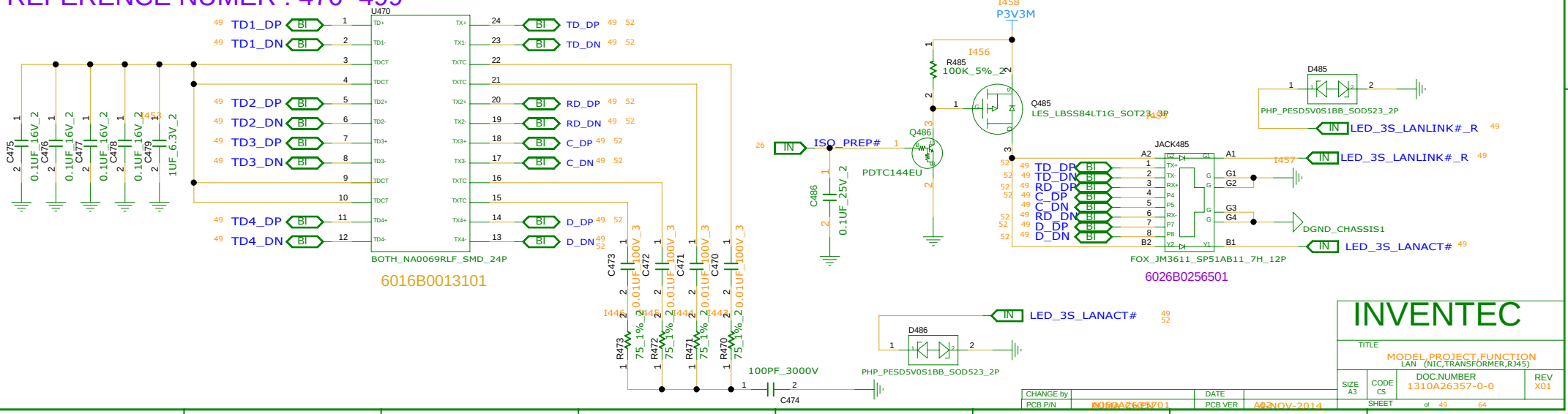

INVENTEC

TITLE: MODEL.PROJECT.FUNCTION
LAN (NIC,TRANSFORMER,RJ45)

SIZE	CODE	DOC.NUMBER	REV
A3	CS	1310A26357-0-0	X01

SHEET 49 of 64

CHANGE by		DATE	
PCB P/N	6050A2635701	PCB VER	A02

02-NOV-2014

WWW.ALIFIXIT.COM

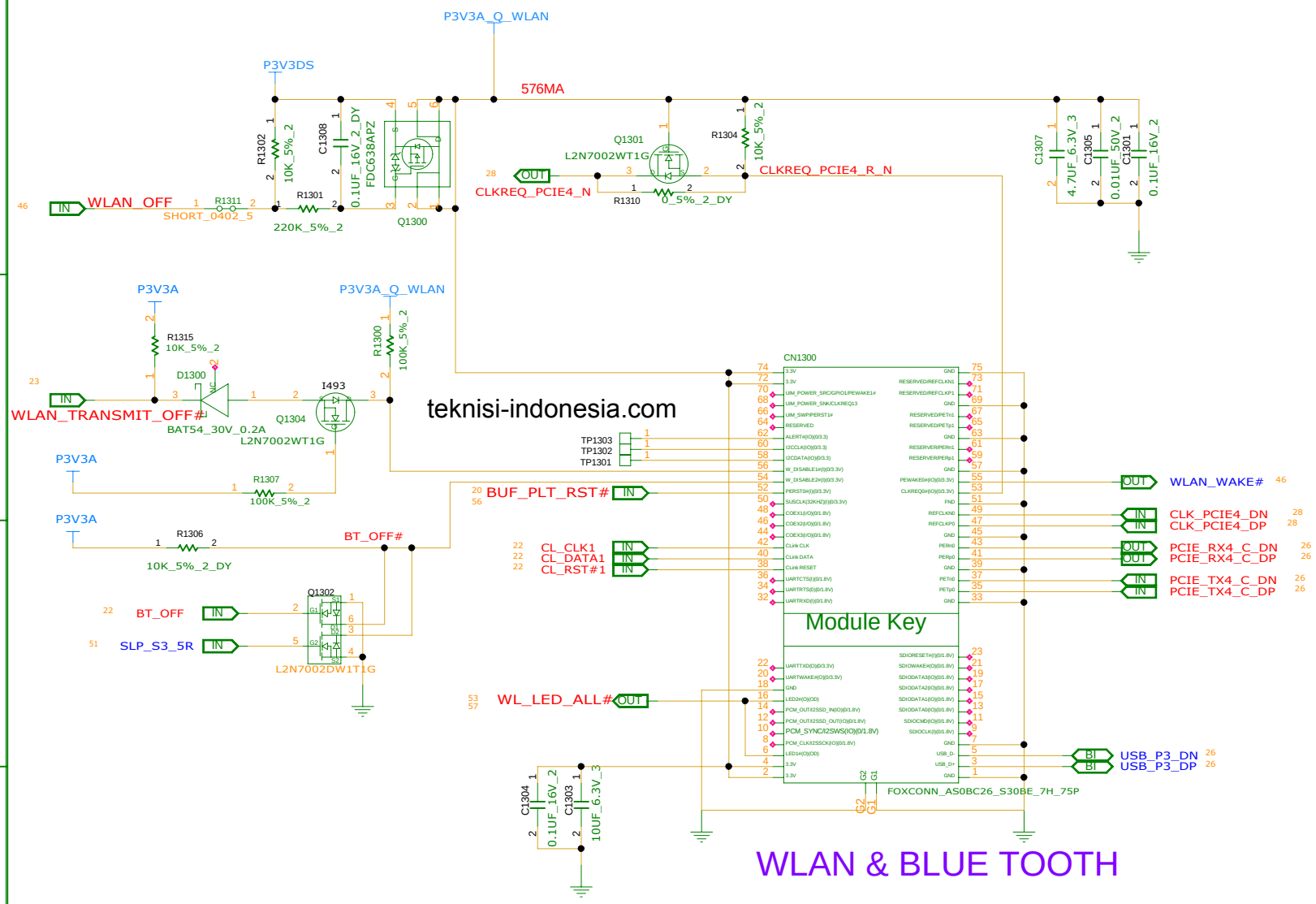

REFERENCE NUMBER:1300~1349

CHANGE by	PUMA_CHEN	DATE	4-NOV-2014
PCB P/N	6050A2635701	PCB VER	A02

INVENTEC

TITLE: MODEL,PROJECT,FUNCTION
WLAN & BLUE TOOTH

SIZE	CODE	DOC.NUMBER	REV
A3	CS	1310A26357-0-0	X01

SHEET 50 of 64

WWW.ALISALER.COM

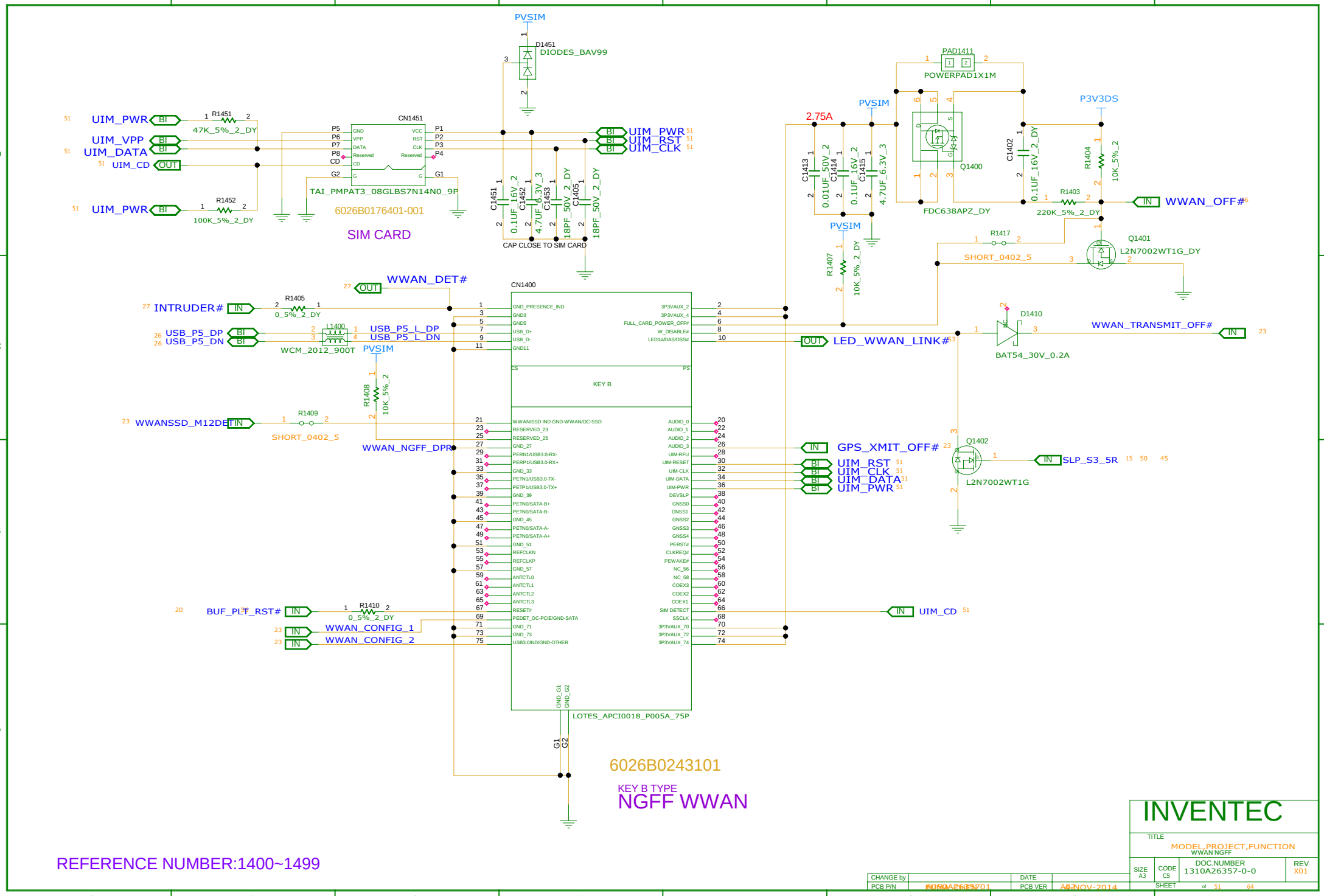
PVSIM
D1451
DIODES_BAV99
UIM_PWR
UIM_VPP
UIM_DATA
UIM_CD
R1451
47K_5%_2_DY
R1452
100K_5%_2_DY
CN1451
TAI_PMPAT3_08GLBS7N14N0_9P
6026B0176401-001
SIM CARD
UIM_RST
UIM_CLK
C1451 0.1UF_16V_2
C1452 4.7UF_6.3V_3
C1453 18PF_50V_2_DY
C1405 18PF_50V_2_DY
CAP CLOSE TO SIM CARD
PAD1411
POWERPAD1X1M
2.75A
C1413 0.01UF_50V_2
C1414 0.1UF_16V_2
C1415 4.7UF_6.3V_3
Q1400
FDC638APZ_DY
C1402 0.1UF_16V_2_DY
P3V3DS
R1404 10K_5%_2
R1403 220K_5%_2_DY
WWAN_OFF#
Q1401
L2N7002WT1G_DY
R1417
SHORT_0402_5
R1407 10K_5%_2_DY
WWAN_DET#
INTRUDER#
R1405 0_5%_2_DY
USB_P5_DP
USB_P5_DN
L1400
WCM_2012_900T
USB_P5_L_DP
USB_P5_L_DN
R1408 10K_5%_2
WWANSSD_M12DET
R1409
SHORT_0402_5
WWAN_NGFF_DPR
CN1400
KEY B
LOTES_APCI0018_P005A_75P
LED_WWAN_LINK#
D1410
BAT54_30V_0.2A
WWAN_TRANSMIT_OFF#
GPS_XMIT_OFF#
UIM_RST
UIM_CLK
UIM_DATA
UIM_PWR
Q1402
L2N7002WT1G
SLP_S3_5R
UIM_CD
BUF_PLT_RST#
R1410 0_5%_2_DY
WWAN_CONFIG_1
WWAN_CONFIG_2
6026B0243101
KEY B TYPE
NGFF WWAN
REFERENCE NUMBER:1400~1499
INVENTEC
TITLE
MODEL,PROJECT,FUNCTION
WWAN NGFF
SIZE A3
CODE CS
DOC.NUMBER 1310A26357-0-0
REV X01
SHEET of 51 64
CHANGE by
PCB P/N
DATE
PCB VER
02-NOV-2014

WWW.ALIFIXIT.COM

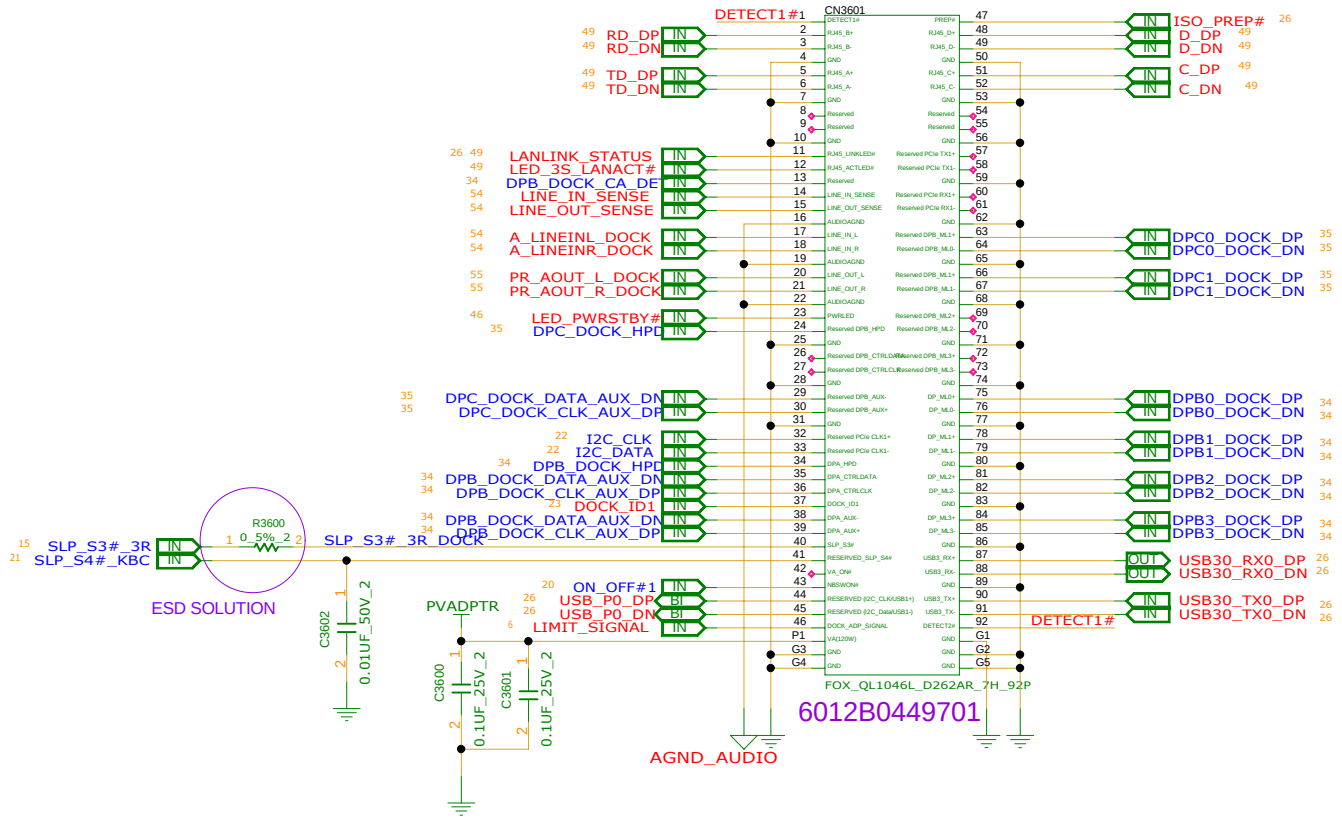

CHANGE by	PUMA_CHEN	DATE	4-NOV-2014
PCB P/N	6050A2635701	PCB VER	A02

INVENTEC

TITLE
MODEL,PROJECT,FUNCTION
DOCKING CONN.

SIZE	CODE	DOC.NUMBER	REV
A3	CS	1310A26357-0-0	X01

SHEET 52 of 64

WWW.ALISALER.COM

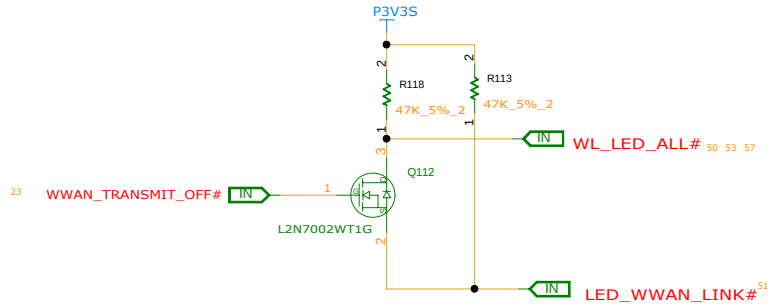

WLAN_WWAN_BLUETOOTH_ LED

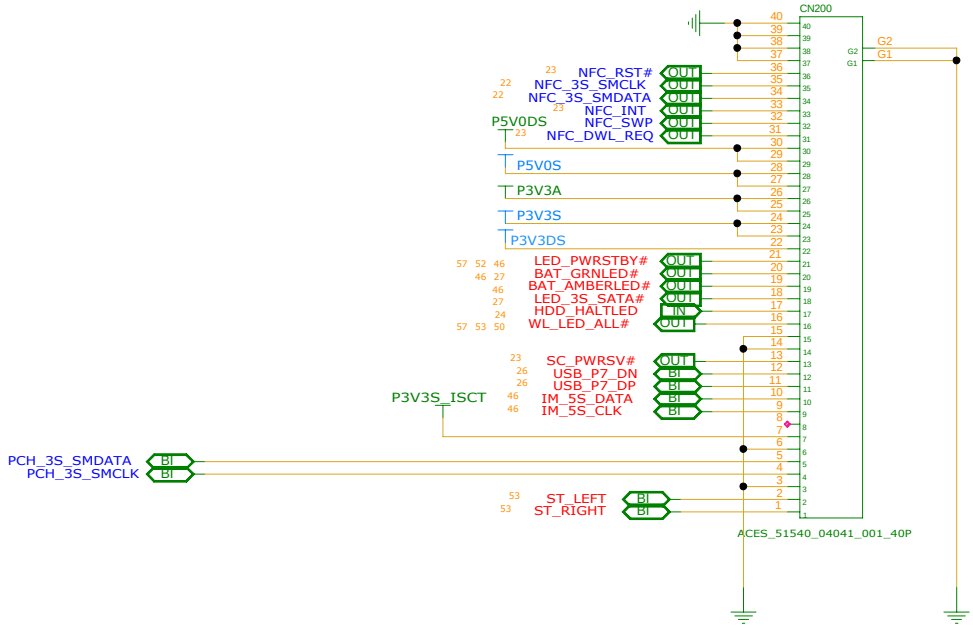

SMART CARD AND TOUCHPAD D/B W TO B CONN

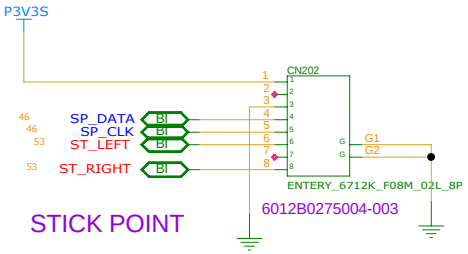

STICK POINT

REFERENCE NUMBER:100~199

CHANGE by	PUMA_CHEN	DATE	4-NOV-2014
PCB P/N	6050A2635701	PCB VER	A02

INVENTEC

TITLE
MODEL,PROJECT,FUNCTION
STICK POINT & B2B CNTR

SIZE	CODE	DOC.NUMBER	REV
A3	CS	1310A26357-0-0	X01

SHEET 53 of 64

WWW.ALIFIXIT.COM

INT-SPEAKER CONN.

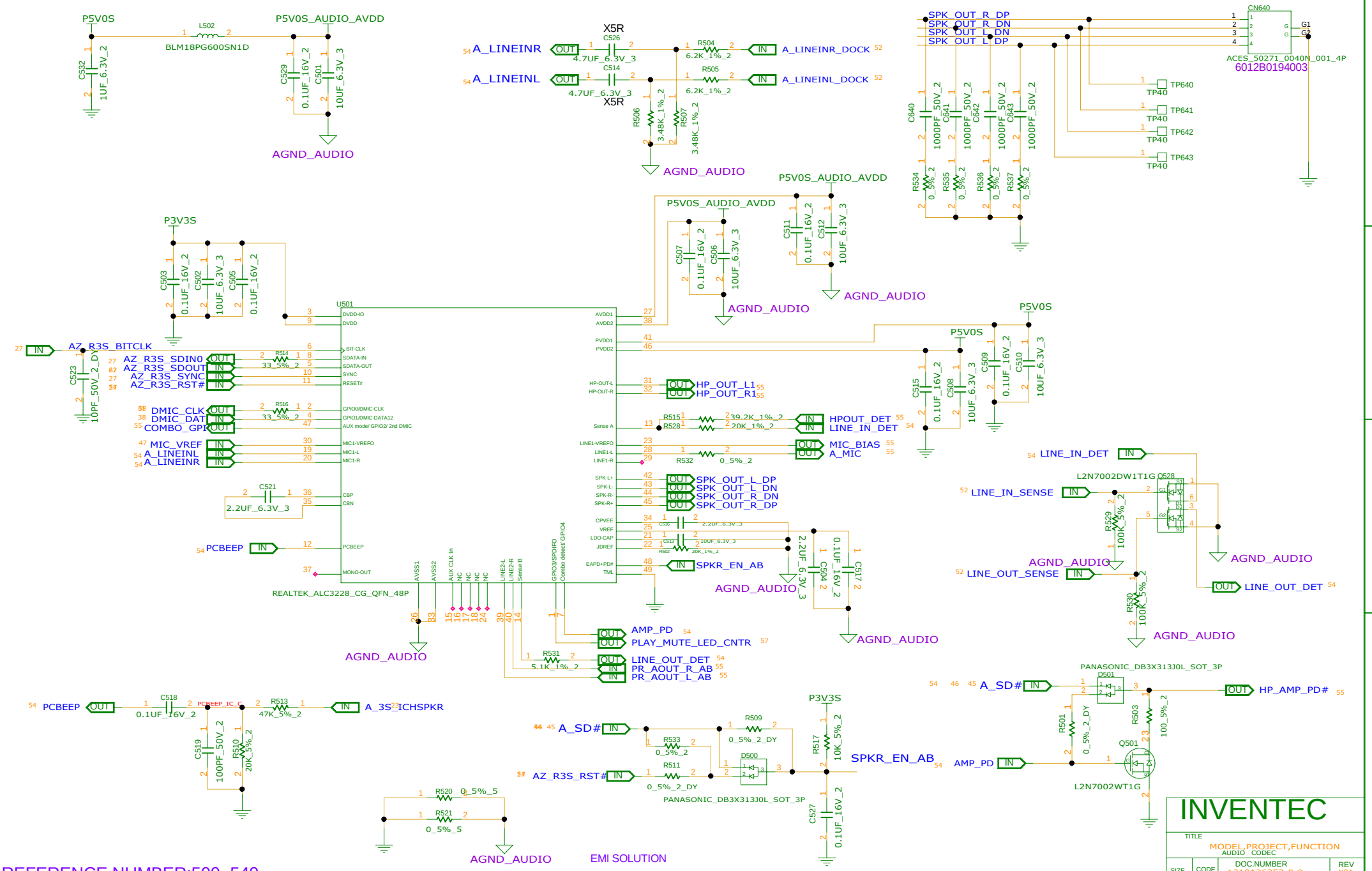

REFERENCE NUMBER:500~549

CHANGE by	PUMA_CHEN	DATE	4-NOV-2014
PCB P/N	6050A2635701	PCB VER	A02

INVENTEC

TITLE: MODEL,PROJECT,FUNCTION
AUDIO CODEC

SIZE	CODE	DOC.NUMBER	REV
A3	CS	1310A26357-0-0	X01

SHEET 54 of 64

WWW.ALISALER.COM

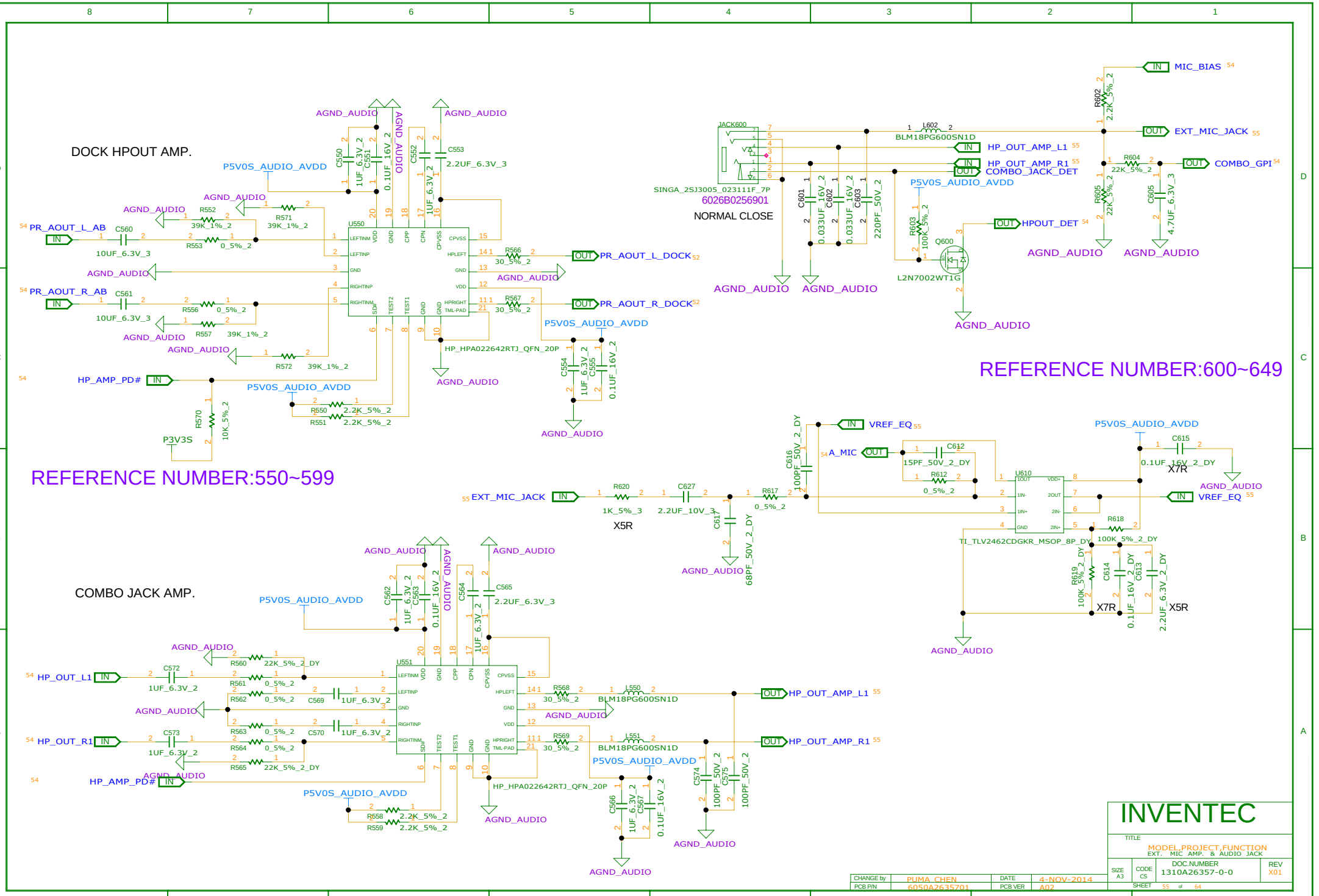
DOCK HPOUT AMP.
U550
HP_HPA022642RTJ_QFN_20P
PR_AOUT_L_AB
PR_AOUT_R_AB
HP_AMP_PD#
PR_AOUT_L_DOCK
PR_AOUT_R_DOCK
P5V0S_AUDIO_AVDD
P3V3S
AGND_AUDIO
REFERENCE NUMBER:550~599
JACK600
SINGA_2SJ3005_023111F_7P
6026B0256901
NORMAL CLOSE
BLM18PG600SN1D
HP_OUT_AMP_L1
HP_OUT_AMP_R1
COMBO_JACK_DET
EXT_MIC_JACK
MIC_BIAS
COMBO_GPI
HPOUT_DET
Q600
L2N7002WT1G
REFERENCE NUMBER:600~649
VREF_EQ
A_MIC
U610
TI_TLV2462CDGKR_MSOP_8P_DY
COMBO JACK AMP.
U551
INVENTEC
MODEL,PROJECT,FUNCTION
EXT. MIC AMP. & AUDIO JACK
DOC.NUMBER
1310A26357-0-0
REV
X01
SIZE
A3
CODE
CS
SHEET
55 of 64
CHANGE by
PUMA_CHEN
DATE
4-NOV-2014
PCB P/N
6050A2635701
PCB VER
A02

WWW.ALIFIXIT.COM

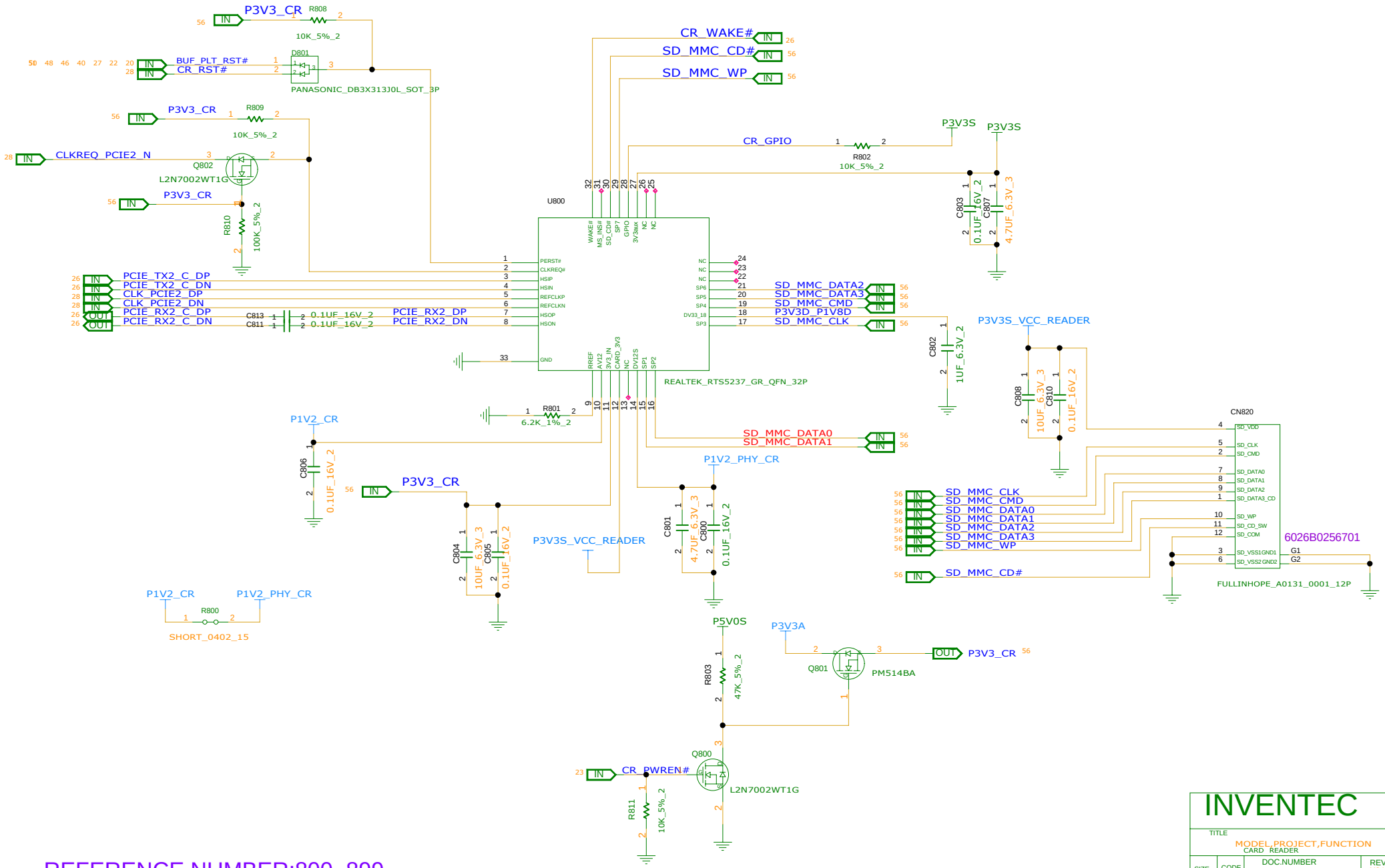

REFERENCE NUMBER:800~899

CHANGE by		DATE	
PCB P/N	6050A2635701	PCB VER	A02

INVENTEC

TITLE: MODEL,PROJECT,FUNCTION
CARD READER

SIZE	CODE	DOC.NUMBER	REV
A3	CS	1310A26357-0-0	X01

SHEET of 56 64

WWW.ALISALER.COM

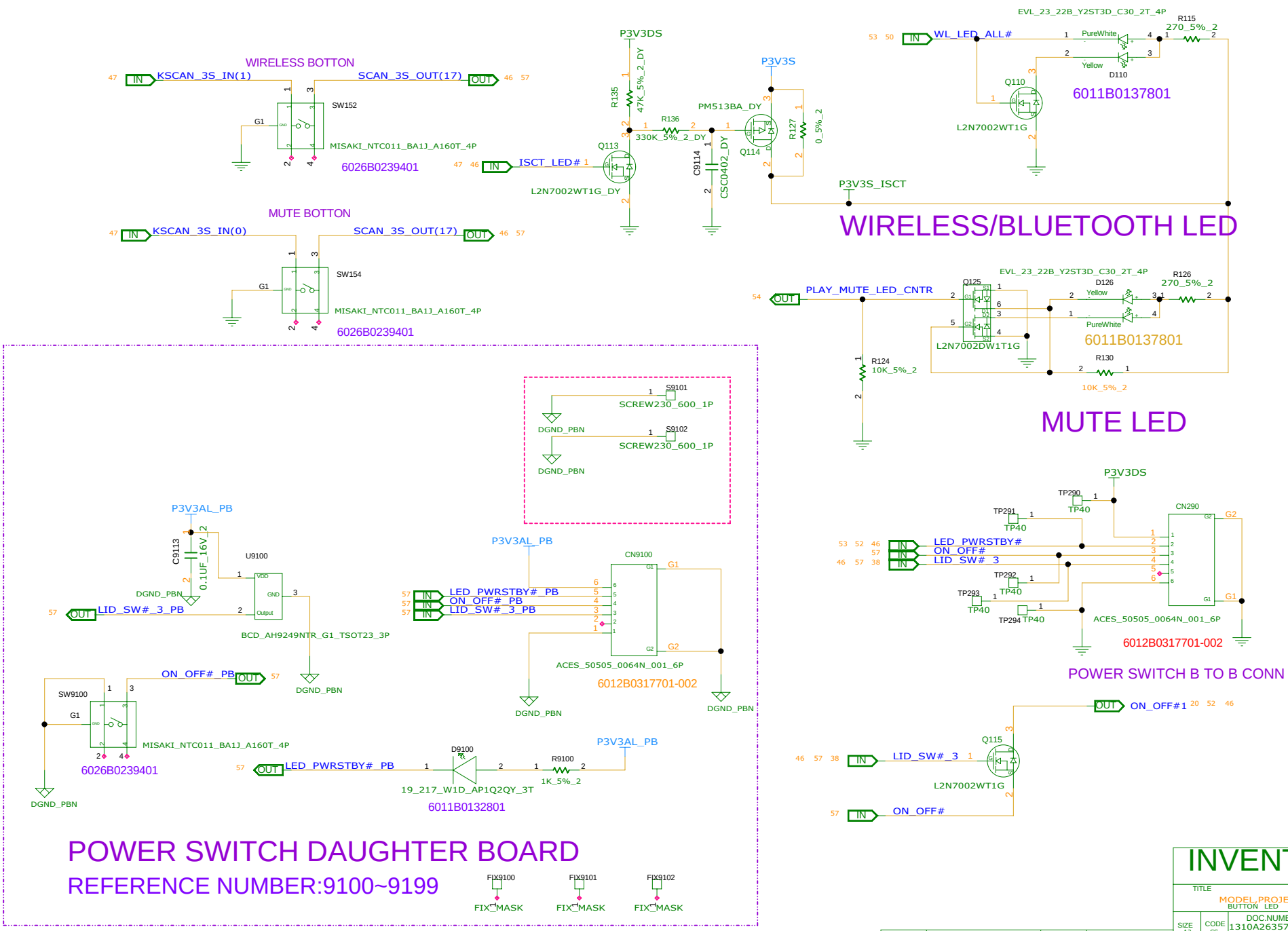
WIRELESS BOTTON
KSCAN_3S_IN(1)
SCAN_3S_OUT(17)
SW152
MISAKI_NTC011_BA1J_A160T_4P
6026B0239401
MUTE BOTTON
KSCAN_3S_IN(0)
SCAN_3S_OUT(17)
SW154
MISAKI_NTC011_BA1J_A160T_4P
6026B0239401
P3V3DS
R135
47K_5%_2_DY
R136
330K_5%_2_DY
Q113
L2N7002WT1G_DY
ISCT_LED#
C9114
CSC0402_DY
PM513BA_DY
Q114
R127
0_5%_2
P3V3S
P3V3S_ISCT
EVL_23_22B_Y2ST3D_C30_2T_4P
WL_LED_ALL#
PureWhite
Yellow
D110
R115
270_5%_2
Q110
L2N7002WT1G
6011B0137801
WIRELESS/BLUETOOTH LED
PLAY_MUTE_LED_CNTR
Q125
L2N7002DW1T1G
D126
R126
270_5%_2
R124
10K_5%_2
R130
10K_5%_2
6011B0137801
MUTE LED
S9101
SCREW230_600_1P
S9102
SCREW230_600_1P
DGND_PBN
P3V3AL_PB
C9113
0.1UF_16V_2
U9100
BCD_AH9249NTR_G1_TSOT23_3P
LID_SW#_3_PB
ON_OFF#_PB
SW9100
MISAKI_NTC011_BA1J_A160T_4P
6026B0239401
CN9100
LED_PWRSTBY#_PB
ON_OFF#_PB
LID_SW#_3_PB
ACES_50505_0064N_001_6P
6012B0317701-002
D9100
19_217_W1D_AP1Q2QY_3T
6011B0132801
R9100
1K_5%_2
LED_PWRSTBY#_PB
P3V3DS
TP290
TP40
TP291
TP292
TP293
TP294
CN290
LED_PWRSTBY#
ON_OFF#
LID_SW#_3
ACES_50505_0064N_001_6P
6012B0317701-002
POWER SWITCH B TO B CONN
ON_OFF#1
Q115
L2N7002WT1G
LID_SW#_3
ON_OFF#
POWER SWITCH DAUGHTER BOARD
REFERENCE NUMBER:9100~9199
FIX9100
FIX9101
FIX9102
FIX_MASK
INVENTEC
TITLE
MODEL,PROJECT,FUNCTION
BUTTON LED
SIZE A3
CODE CS
DOC.NUMBER 1310A26357-0-0
REV X01
SHEET 57 of 64
CHANGE by PUMA_CHEN
DATE 4-NOV-2014
PCB P/N 6050A2635701
PCB VER A02

WWW.ALIFIXIT.COM

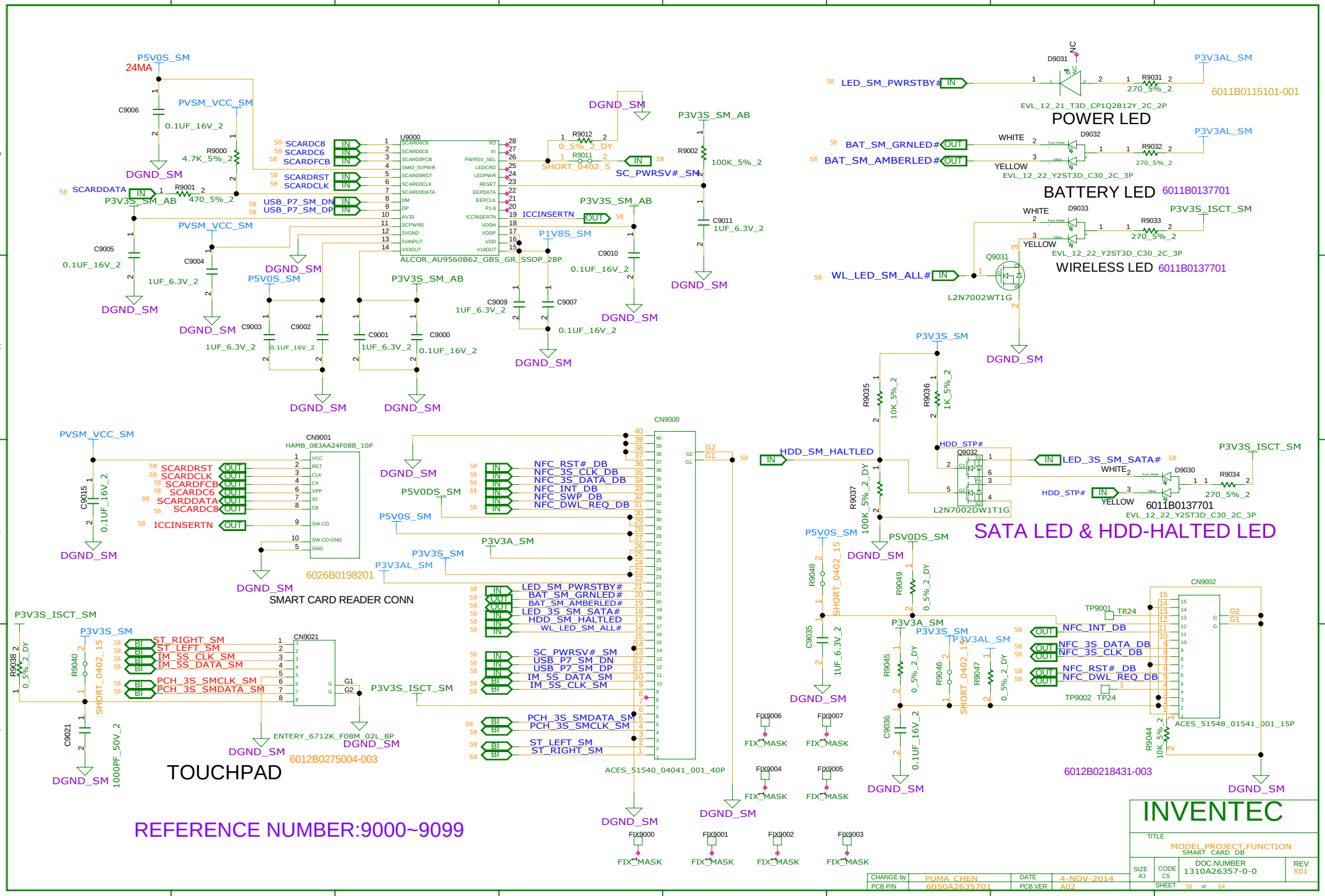

WWW.ALISALER.COM

RESERVED

CHANGE by	PUMA_CHEN	DATE	4-NOV-2014
PCB P/N	6050A2635701	PCB VER	A02

INVENTEC

TITLE
MODEL,PROJECT,FUNCTION
RESERVED

SIZE	CODE	DOC.NUMBER	REV
A3	CS	1310A26357-0-0	X01

SHEET 59 of 64

WWW.ALIFIXIT.COM

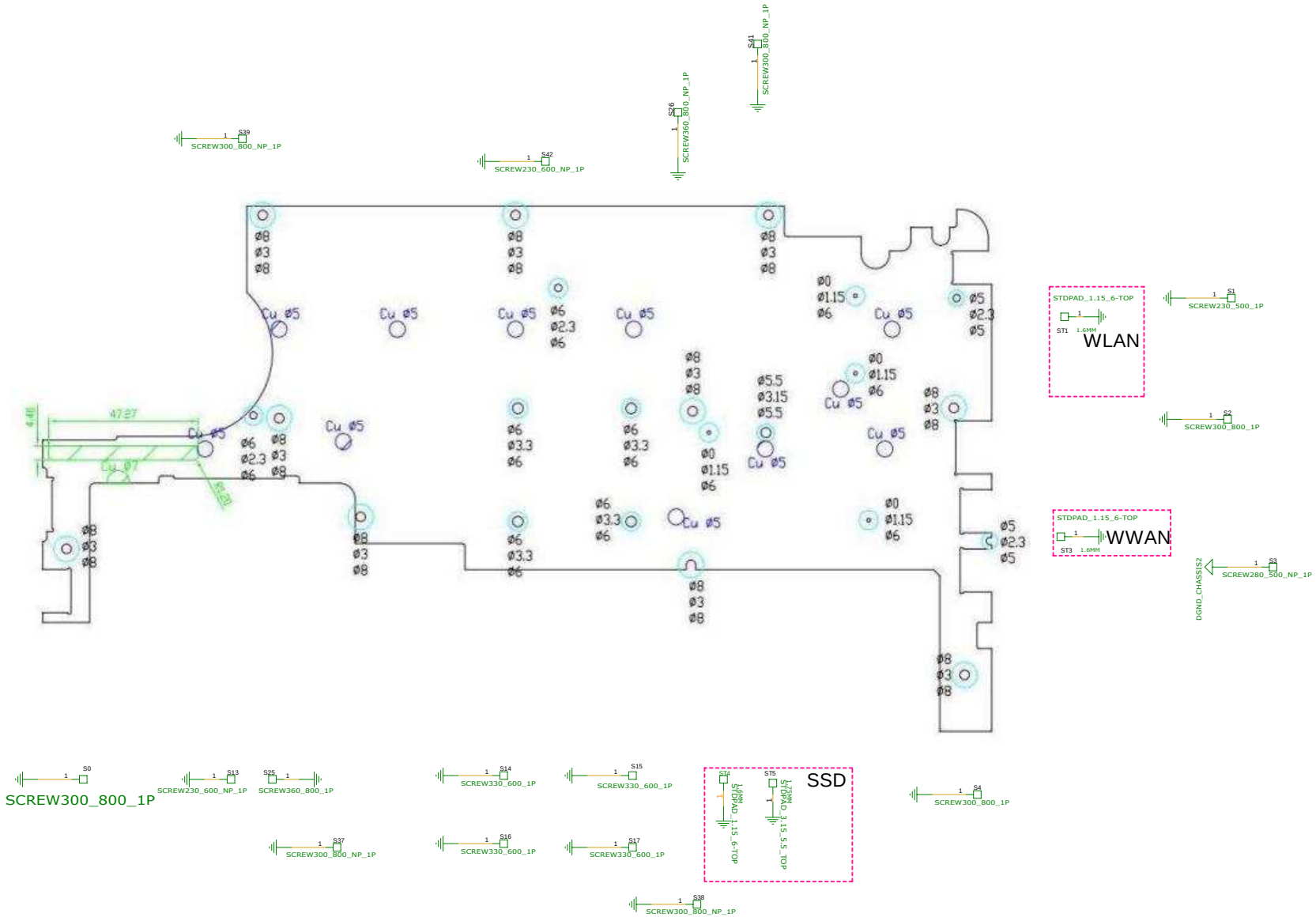

WWW.ALISALER.COM

CHANGE BY		DATE	
PCB P/N	60.10A06.35700	PCB VER	4.0

TITLE
MODEL,PROJECT,FUNCTION
SCREW

SIZE	CODE	DOC.NUMBER	REV
C	CS	1310A2637-0-0	X01

SHEET 64 of 64

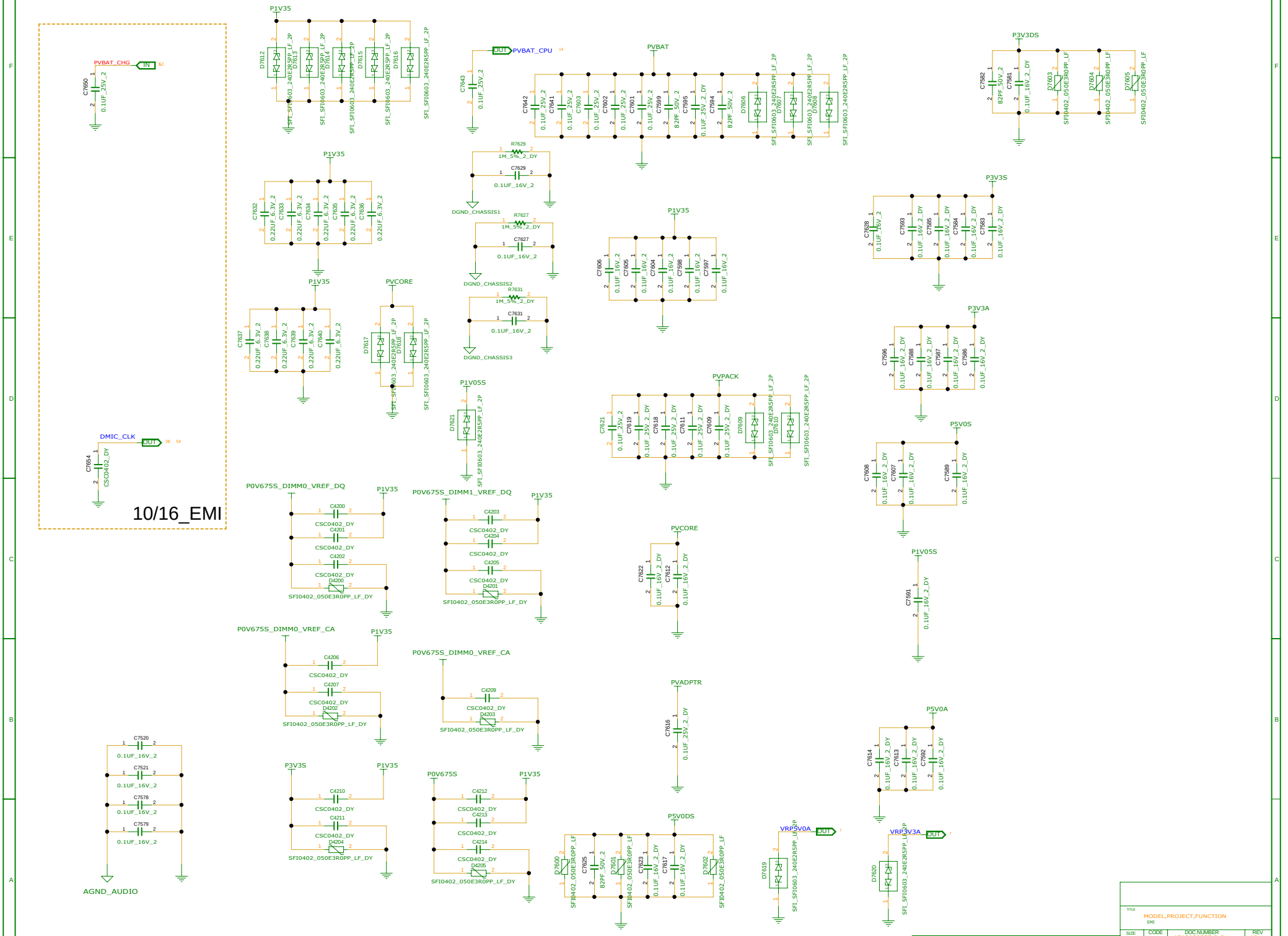
10/16_EMI
PVBAT_CHG
IN
PVBAT_CPU
OUT
DMIC_CLK
OUT
P1V35
PVBAT
P3V3DS
P3V3S
P3V3A
P5V0S
P1V05S
PVCORE
PVPACK
PVADPTR
P5V0A
P5V0DS
VRP5V0A
VRP3V3A
P0V675S_DIMM0_VREF_DQ
P0V675S_DIMM1_VREF_DQ
P0V675S_DIMM0_VREF_CA
P0V675S
DGND_CHASSIS1
DGND_CHASSIS2
DGND_CHASSIS3
AGND_AUDIO
MODEL,PROJECT,FUNCTION
EMI
DOC.NUMBER
1310A2637-0-0
REV
X01

WWW.ALIFIXIT.COM

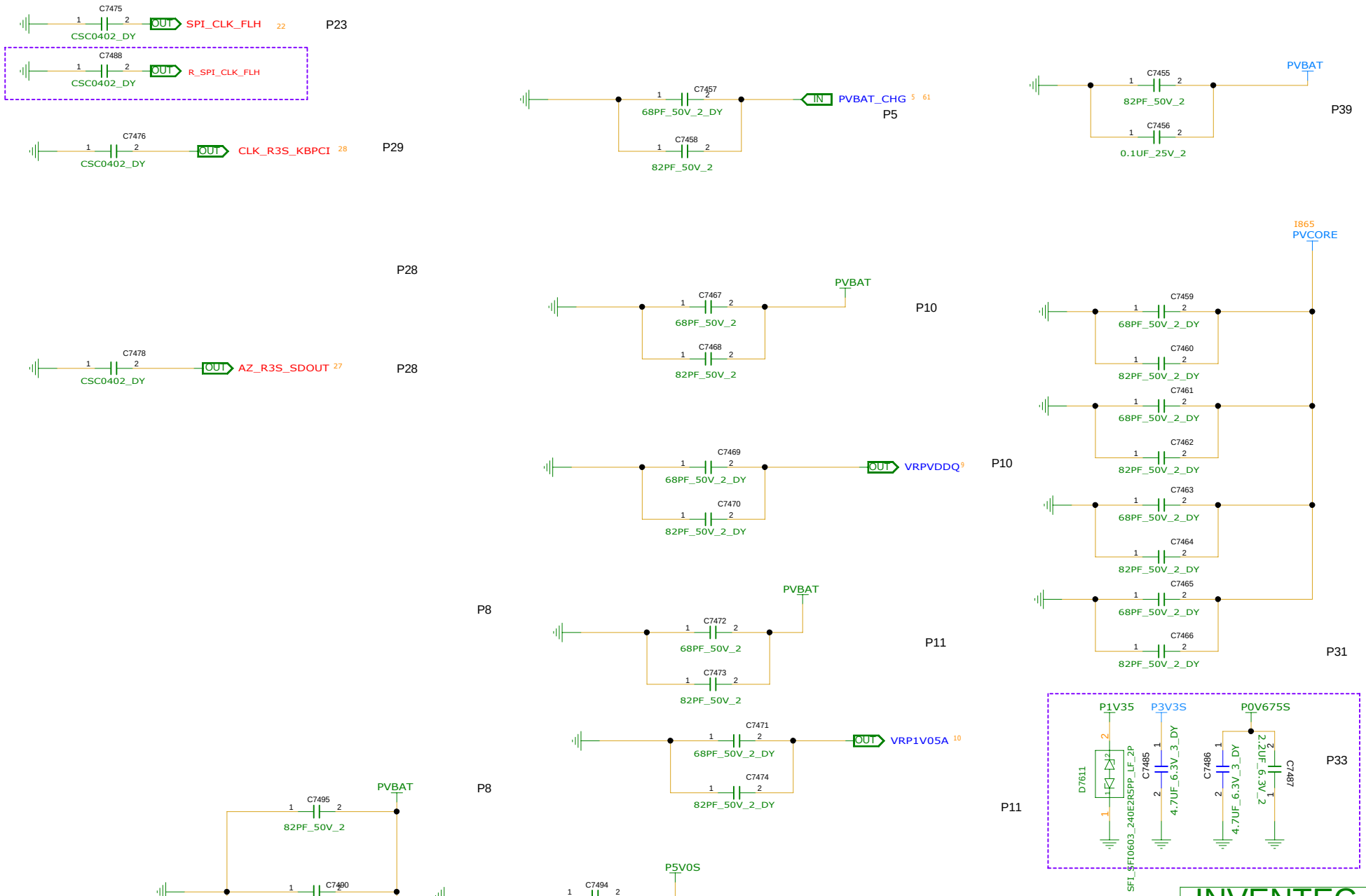

INVENTEC

TITLE
MODEL,PROJECT,FUNCTION
SYSTEM SEQUENCE

CHANGE by	PUMA_CHEN	DATE	4-NOV-2014
PCB P/N	6050A2635701	PCB VER	A02

SIZE	CODE	DOC.NUMBER	REV
A3	CS	1310A26357-0-0	X01

SHEET 62 of 64

WWW.ALISALER.COM

	BRD_ID1	BRD_ID2	BRD_ID3	BRD_ID4	
	GPIO201	GPIO202	GPIO203	GPIO204	AMD FCH
	GPIO14	GPIO34	GPIO35	GPIO40	PPNT
	GPIO15	GPIO34	GPIO35	GPIO40	LPT-H
BOARD REVISION	GPIO83	GPIO77	GPIO78	GPIO79	LPT-LP
DB 0	0	0	0	0	
DB 1	0	0	0	1	
DB 2	0	0	1	0	
	0	1	0	0	
SI 1	0	0	1	1	
SI 1B	0	1	0	1	
SI 2	0	1	1	1	
	0	1	1	0	
PV 1	1	0	0	0	
	1	0	0	1	
	1	0	1	0	
	1	0	1	1	
MV	1	1	0	0	
	1	1	0	1	
	1	1	1	0	
	1	1	1	1	

INVENTEC

TITLE
MODEL,PROJECT,FUNCTION
Block Diagram

CHANGE by	PUMA_CHEN	DATE	4-NOV-2014
PCB P/N	6050A2635701	PCB VER	A02

SIZE	CODE	DOC.NUMBER	REV
A3	CS	1310A26357-0-0	X01

SHEET 63 of 64

WWW.ALIFIXIT.COM

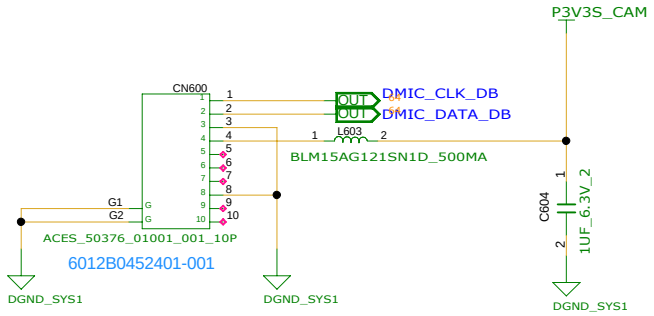

MIC CONN

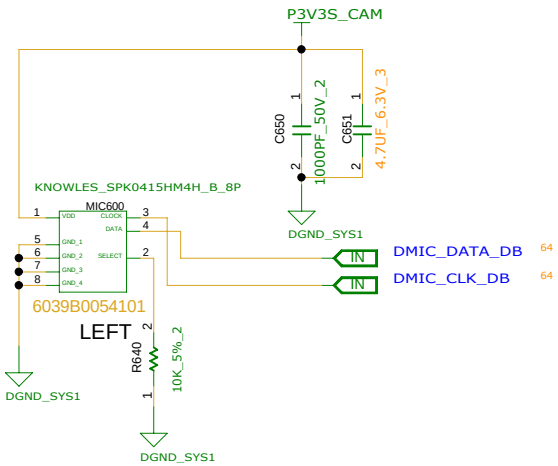

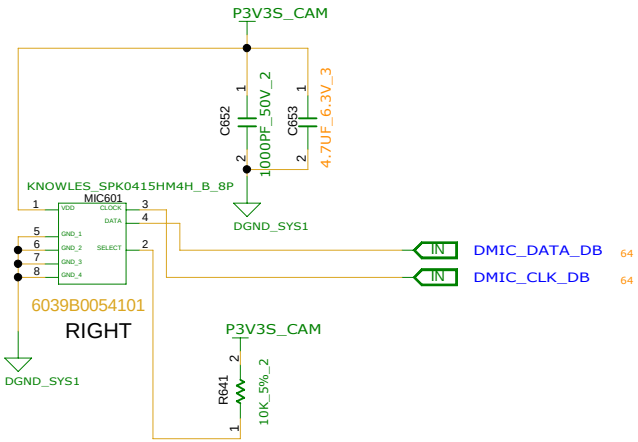

REFERENCE NUMBER:600~649

MIC DOUGHTER BOARD

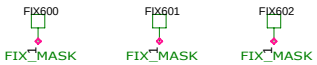

CHANGE by	PUMA_CHEN	DATE	4-NOV-2014
PCB P/N	6050A2635701	PCB VER	A02

INVENTEC

TITLE: MODEL,PROJECT,FUNCTION Block Diagram

SIZE	CODE	DOC.NUMBER	REV
A3	CS	1310A26357-0-0	X01

SHEET 64 of 64

WWW.ALISALER.COM